DOCUMENT RESUME

ED 149 546 EC 103 862

AUTHOR Gill, J. M., Ed.; Clark, L. L., Ed.
TITLE Braille Research Newsletter (Braille Automation Newsletter). Nos. 1, 2, 3, 5, and 6.
INSTITUTION American Foundation for the Blind, New York, N.Y.
PUB DATE 77
NOTE 327p.; The Newsletter is also a product of the Univ. of Warwick Research Unit for the Blind, Coventry, England

EDRS PRICE MF-$0.83 HC-$18.07 Plus Postage.
DESCRIPTORS *Blind; *Braille; *Computers; Electromechanical Aids; Newsletters; *Research Reviews (Publications); Visually Handicapped

ABSTRACT

Presented is a compilation of the February 1976, August 1976, December 1976, July 1977, and October 1977 issues of the "Braille Research Newsletter". Each issue usually includes an editorial, several articles, and a listing of publications and reports. Among the articles are the following titles and authors: "Discussion Paper on the Desirability of a Joint Research Project on the Braille Code, Extending the Use of Braille, and the Improvement of Reading Skills" (J. Douce and M. Tobin); "Current Research at the Perceptual Alternatives Laboratory" (E. Foulke); "A Feasability Study on a Braille Transcription Service for Short Documents" (J. Gill and J. Humphreys); "Computer-Assisted Transcription of Braille Music" (S. Wilkinson); "Automated Braille Research at the National Physical Laboratory" (J. Howlett); "Available Page Braille Embossers" (J. Gill); "Using Redundancy for the Syntactic Analysis of Natural Languages--Application to the Automatic Correction of French Text" (J. Courtin); "The Introduction of Braille Produced by Computer at the Canadian National Institute for the Blind" (D. Brown); and "World Council for the Welfare of the Blind Committee on Computerized Braille Production" (E. Munoz, et al.). (SBH)

****
* Reproductions supplied by EDRS are the best that can be made *
* from the original document. *
****

ED149546

U.S. DEPARTMENT OF HEALTH, EDUCATION & WELFARE
NATIONAL INSTITUTE OF EDUCATION

THIS DOCUMENT HAS BEEN REPRODUCED EXACTLY AS RECEIVED FROM THE PERSON OR ORGANIZATION ORIGINATING IT. POINTS OF VIEW OR OPINIONS STATED DO NOT NECESSARILY REPRESENT OFFICIAL NATIONAL INSTITUTE OF EDUCATION POSITION OR POLICY

BRAILLE AUTOMATION NEWSLETTER

BRAILLE RESEARCH NEWSLETTER

Nos. 1, 2, 3, 5, & 6

Edited by

J.M. Gill and L.L. Clark

Warwick Research Unit for
the Blind
University of Warwick
Coventry CV4 7AL
England

American Foundation for
the Blind
15 West 16th Street
New York 10011
U.S.A.

"PERMISSION TO REPRODUCE THIS MATERIAL HAS BEEN GRANTED BY

J.M. Gill

TO THE EDUCATIONAL RESOURCES INFORMATION CENTER (ERIC) AND USERS OF THE ERIC SYSTEM."

EC103862

BRAILLE AUTOMATION NEWSLETTER

February 1976

edited by

J.M. Gill and L.L. Clark

Warwick Research Unit for the
Blind,
University of Warwick,
Coventry CV4 7AL
England

American Foundation for the
Blind,
15 West 16th Street,
New York 10011
U.S.A.

Contents

	Page
Editorial	2
Discussion Paper on the Desirability of a Joint Research Project on the Braille Code, Extending the Use of Braille, and the Improvement of Reading Skills by J.L. Douce and M.J. Tobin	5
The Delft Embosser by A.N. Westland	8
Triformation Systems' Automatic Braille Translation Support Equipment by R.J. Snipas	9
International Register of Research on Blindness and Visual Impairment	11
Research Project on Braille Printing by H.J. Küppers	12
Current Research at the Perceptual Alternatives Laboratory by E. Foulke	13
AFB Autobraille Project by L.L. Clark	14
Some Thoughts on Future Braille Research by P.W.F. Coleman	15
National Computing Conference 1976	20
Publications and Reports	21
Circulation list	24

Editorial

The Braille Automation Newsletter has been created as a joint product of the International Research Information Service of the American Foundation for the Blind, New York, and the Warwick Research Unit for the Blind, University of Warwick, England, as an aid in communicating among that community of researchers and developers interested in applied research involving braille production with computer-assisted systems. For maximum usefulness, it ought to be read in conjunction with the Newsletter of the Visually Impaired Data Processors International (VIDPI), whose address is given below.* During the next two to three years, the Braille Automation Newsletter will be sent at no cost to the distribution list indicated on the last page herein. After that period of time has gone by, a decision will have to be made about the future of the Newsletter: whether it ought to become self-supporting through subscription, whether it ought to be combined with the VIDPI Newsletter, or whether some other means ought to be found to distribute the kinds of information we are to publish.

In view of its transient nature, therefore, some idea of the reasons why this Newsletter appears may be of interest. Experienced researchers in this area will remember that as far back as 1962, Robert W. Mann, John K. Dupress, and their colleagues at MIT called for an effort to be made to enhance the availability of braille. Their purpose was two-fold. The first was to achieve transfer of the availability of sophisticated technologies to aid in the process of making braille available in greater quantity, greater variety, and at lower cost. The second was to see whether by enhancing the availability of braille, and by deploying its use more widely, we could test the proposition that the apparent decline in braille use was due to declining interest in braille as a communication medium - or whether its use was declining because it was indeed not available in the quantity and

---

*Visually Impaired Data Processors International (VIDPI)
P.O. 844, Evergreen Park, Illinois 69642.

variety readers wanted, when they wanted it, and at a cost which made it possible for them to acquire it.

A small number of conferences followed in the intervening years, at which the technical means by which computers could assist in braille production were spelled out; and in which the difficulties in the braille code itself were elucidated that made automatic transcription difficult.

The outcome of the attention paid over the years to this area resulted in a rather curious situation. On the one hand, the research and systems technology community responded to the expressed need by inventing, developing, and refining ever more sophisticated means by which the availability of braille could be enhanced. On the other hand, understanding of what the technologists were about was minimal among the members of that community who would have to fund, and then find use for, the products of technological application. The result has been that many significant solutions to the difficulties in enhancing the availability of braille have lain waiting application and use. Some of these developments, reduced to written form, have been published in the pages of the AFB Research Bulletin, and in special reports and monographs issued at universities and research centres. Other developments have become known to only a small coterie of researchers and others with similar interests through private correspondence and personal visits. It is evident that this inefficient mode of information dissemination led to replication of activity, poor utilization of work already done, and incomplete understanding of the technicalities of the process of computer assisted braille transcription. This writer can also report his surprise, during the course of contacting several individuals regarding details of the AFB braille project reported later in this issue, at the enormous amount of thought that has gone wholly unreported to the larger community of persons interested in the research and development of automatic braille transcription.

This Newsletter, as we have already said, can only aid in the improvement of communication among the affected community of researchers and developers; unfortunately we cannot fund these developments! But we think that a Newsletter materially assisting the awareness of affected persons about current activities in this field, having a short delay before publication and distribution of the news to be reported, can serve more than one purpose. It may help to remind some workers that they are not alone(!). It may help in consolidating a concensus about what might comprise a comprehensive program of research and development in this area. It may help in indicating places in the world where special expertise exists. It may suggest collaborative links among the several countries in which work is under way. It may save the time of some workers who can obtain required packets of software and/or hardware from others. And so on. The main point to be made is that this publication is a product of you, the reader, and it exists to serve your interests. We stand ready to help you in the dissemination of information about your work, and no reasonable request toward that end will be ignored. Nor should you hesitate to tell us what you like and don't like about the format, style, or content; we are open to suggestions. If you are located in Europe, you may direct your letter to John M. Gill at Warwick University. If you are located elsewhere in the world, you may direct your letter to me.

Good luck in your work!

L.L. Clark

Discussion Paper on the Desirability of a Joint Research Project on the Braille Code, Extending the use of Braille, and the Improvement of Reading Skills

J.L. Douce and M.J. Tobin

This document is intended to stimulate discussion on the desirability of scientifically examining the case for a revision of the current system of braille contractions and abbreviations. It has been prepared jointly by the Research Centre for the Education of the Visually Handicapped (Dr. M.J. Tobin) and the Warwick Research Unit for the Blind (Prof. J.L. Douce). These two research groups are considering the joint project described, combining expertise in the problems of braille perception, teaching, learning and transcription.

If you have any comments, of a general or specific nature, please send them to Prof. J.L. Douce, Warwick Research Unit for the Blind, University of Warwick, Coventry CV4 7AL or Dr. M.J. Tobin, Research Centre for the Education of the Visually Handicapped, University of Birmingham, 50 Wellington Road, Edgbaston, Birmingham B15 2EP.

It is now twenty years ago that the last major re-appraisal of Standard English Braille was undertaken by the National Uniform Type Committee. That re-appraisal centred round the Lochhead and Lorimer study of the frequency values of all contractions in Grade 2 braille. Despite the highly practical proposals put forward by the authors, it is true to say that no significant changes emerged. Since that time, various developments have been under way, three of which seem especially pertinent.

(i) One of these can be described as a gathering, if rarely articulated, dissatisfaction with the difficulties, anomalies, and inconsistencies of Standard English Grade 2 Braille, particularly as they affect the learning of Braille by congenitally blind children of average and below average ability and by newly-blinded adults who have been ink-print readers before the onset of blindness.

(ii) Another has been a general concern with the improvement of reading efficiency among sighted readers, many of whom have received instruction in reading techniques that are claimed to increase reading speeds by factors of 2, 3, and 4. Inevitably this has aroused interest among teachers and readers of Braille, with the consequence that attempts have been made, notably in the United States, to transfer some of these techniques to the tactile reading situation. This interest has been given added impetus by investigations showing that Braille reading is, typically, something like two-thirds slower than ink-print reading.

(iii) The third, and apparently unrelated, development is the attention being given by scientists and technologists to the educational, vocational, and rehabilitation problems of the handicapped in general, and the blind in particular. Of specific relevance to this discussion is the engineer's concern with ways of increasing the accessibility to the blind of the growing mass of 'written' information (witness the design and use of reading machines such as the Optacon, Textobraille, Stereotoner and the increasing quantity of transcription by computers).

It may be that the time is now opportune for looking at these three phenomena together in the hope that Braille may be made available to a much larger proportion of the blind and so that those already possessing some competence in it could increase their reading efficiency. More needs to be known about the cognitive, perceptual, and motor skills associated with 'rapid' reading, and about the motivational factors involved. But progress here will be less than optimal unless there is, as Lochhead and Lorimer put it, 'some pruning of dead wood' and some simplification of the governing rules of Standard English Grade 2 Braille. It seems probable that computer technology could facilitate the attaining of some of these objectives by 'generating' an alternative Braille system (with pre-specified 'space-saving' characteristics) that could then be put to experimental test to ascertain relative acceptability, average reading speeds, and ease of learning.

To undertake a thorough study of this subject, and to put forward conclusions with reasonable expectation that any proposals for change will be implemented, the following programme of work is envisaged:

(i) A representative selection of textual material comprising sections of novels, textbooks, short documents and correspondence will be assembled. An analysis similar to that reported by Lochhead and Lorimer (1954) will be undertaken; the significant differences being that the analysis will be done from data in computer-readable form, and will consider a larger amount of material.

(ii) A wide range of users and experts will be consulted for suggested revision.

(iii) A statistical study will be undertaken on the effects of the proposed revisions, to assess their significance with regard to potential reduction in the number of rules and saving of space.

(iv) Revisions showing promise will be evaluated in carefully designed experiments to test their effects on learning time, reading speed and acceptability.

(v) Feedback from these experiments will be used to improve the proposals and refine the experiments, hopefully leading to definitive results backed by scientific evidence supporting, or refuting, the case for modifying Grade 2 Braille.

It would of course be possible to push ahead separately with the improving of reading efficiency and with the examination of ways of pruning/simplifying/up-dating the code. There is, however, much more to be said in favour of combining these two objectives within the framework of a single unified project. The endorsing of the desirability of such a programme

of research and development by braille readers, teachers, and braille producers is clearly a necessary pre-requisite, and this brief, introductory statement is intended to do no more than contribute to the start of the discussion.

The Delft Embosser

A.N. Westland

The first prototype of the "Delft" braille-lineprinter is ready and working. The first test runs were encouraging. The design speed of five lines per second has been reached, still producing braille of good quality (equal heights of the produced braille dots).

A second prototype is now under construction, using the same principle, but having fewer parts, printing one braille line in two cycles. The printing (embossing) speed should be the same five lines per second.

An article about the first prototype has been accepted for publication in Research Bulletin of the American Foundation for the Blind.

"Triformation Systems' Automatic Braille Translation Support Equipment"

R.J. Snipas

Triformation Systems, Inc. of Stuart, Florida, USA is currently manufacturing four Braille Terminal Printer devices which give the blind the capability of interacting with commercial computer systems and to participate in all phases of automated Braille translation.

There are two terminals which operate at teletype speed and emboss their output on paper tape. The BD-3 (Braille Device-3) is a read-only device which acts as a slave unit to a teletype or any other slow speed, keyboard terminal. The ISE-1 (Interactive Strip Embosser-1) adds a keyboard and modem to the BD-3 to become an independant, portable computer terminal. Both of the above mentioned products can be used for text preparation and to control Braille translation software systems.

The LED-1 (Line Embossing Device-1) which was prototyped and displayed several years ago has had many design changes and is currently in limited manufacturing. LED-1 is a character oriented terminal compatible with teletype systems. It can be used the same as our strip, paper tape devices with the added advantage of page format.

Triformation Systems' LED-120 (Line Embossing Device-120) is currently being used world-wide as an interactive computer terminal and as a peripheral printer for Braille translation systems. This device produces 40-character Braille lines on fan-fold, continuous Braille paper. Braille producers, for the most part, use the LED-120 as an off-line printer driven by a storage device such as paper tape or digital cassette. The one-hundred twenty characters per second maximum operating speed of the LED-120 allows for the embossing of a page of Braille text in about ten seconds. Recent revisions of this printer have improved its mechanical durability and electronic capabilities.

There is now a parallel interface for direct connection to the computer, increased buffer size to accommodate more and varied storage devices, and capability for switching input codes.

Two areas are being explored concerning the use of paper by the LED-120. The first is a coordinated effort by the present LED-120 users group to purchase the paper in quantity. This way the cost could be reduced by a factor of more than 50%.

The second possibility is to be able to produce inter-point Braille. Two approaches are being researched by Triformation Systems with the hope that some form of inter-pointing can be implemented with the LED-120 mechanical revisions. Triformations' page embossers now have the capability of producing Braille on paper ranging from standard, computer printer paper for throw-away Braille to standard Braille paper.

In 1973 Triformation Systems developed conversion electronics that translated the key strokes of a Braillist into a computer-readable code. When Braille text produced on a Perkins Braillewriter was also captured in digital form on a cassette, the text could be reproduced on the LED-120 at ten seconds per page. Due to its limited editing capability, the P.B.C.E. (Perkins Braille Control Electronics) system has not been widely used. However, due to the demand of Braille producers who want to automate their production but do not want to become involved with a computer system, we are in the process of redesigning the P.B.C.E. By using the most advanced technology in micro-digital-recorders and video display editing devices, we hope that the new P.B.C.E. will be a complete Braille production centre at a reasonable cost.

I hope in future articles to be able to give more details on not only our new Braille system but also other devices that I have mentioned and some that are still on the drawing board.

International Register of Research on Blindness and Visual Impairment

The first section of the register contains the names, addresses and brief description of projects of those who are working in the natural, behavioural and technological sciences bearing on problems arising from visual impairment. This register does not include purely medical research, but it does aim to include research on the causes of blindness, work with extremely low vision patients, sight-restoration and management, and referral of patients who are undergoing deterioration of visual capacity.

The second section includes:

(i) Abbreviations of the names and organisations concerned with research for the blind and visually impaired.
(ii) Periodicals which sometimes include relevant articles with significant research content.
(iii) Abstract journals, information services and data bases which claim to cover some, or all, of this field.
(iv) Brief list of some standard reference books.

Copies of the register are £5.00 (or equivalent in other negotiable currencies) each, and can be obtained from Dr. J.M. Gill, Warwick Research Unit for the Blind, University of Warwick, Coventry CV4 7AL, England. Cheques, made payable to "The University of Warwick", should accompany the order.

A braille edition is also available; price on request.

Research Project on Braille Printing

H.J. Küppers

The government sponsored research project has been running for two years by a research group of the STIFTUNG REHABILITATION in Heidelberg, Germany. In cooperation with the University of Münster their braille translation programme was being utilized into braille book production. The on-line text input with text editing systems as well as the off-line use of text-automats has been explored. Considerable attention has been given to the use of compositors tape.

The reproduction of the computer output into braille books can be done by either fast braille line-printers or data-controlled zinc-sheet embossing machines. For this purpose a fast stereotyper has been developed with the project.

In addition to the computerised production of braille data, a braille text-automat with high level direction facilities is almost finished. This unit can be used by either blind or sighted transcribers. The purpose is to transcribe complicated text which can hardly be translated by the computer on data-storage.

A demonstration of the total system will be given at the beginning of April, 1976.

Current Research at the Perceptual Alternatives Laboratory

E. Foulke

The print-to-braille translation system makes use of a Data General computer, the Nova 800, with a 512k disc. The present system uses an on-line teletypewriter for input and an on-line Triformation LED-120 for the braille output. However off-line data preparation using punched paper tape is being considered, as well as controlling the LED-120 from a digital cassette.

Our computer translation program uses a look-up table, on disc, which consists of the 80,000 words in the Thorndike-Barnhart Dictionary. Each entry includes the instructions for contracting the word, if it is contractable, and the instructions for hyphenating the word, if it has more than one syllable. If a word is not found in the look-up table, it is simply rendered in Grade I, and if it happens to occur near the end of a braille line, no attempt is made to hyphenate it.

We have now created our file, and the system is, except for one minor problem, ready to put into operation. The minor problem to which I refer is the lack of operating funds. We have no money with which to pay an operator, and so we just sit around and admire a system which is capable of providing a service that we know people want, but which sits idle for lack of operating funds. Of course, we are exploring funding possibilities, but we have turned up nothing very promising yet.

AFB Autobraille Project

L.L. Clark

A perilously simple experiment has been undertaken by a small group of researchers located around New York to see whether new technologies can reduce both the cost and the labour of automatic transcription of braille by computer. Given an analogue of ink print text in machine-readable form, the question is: If a composite digital tape is created in which photocomposition codes are overlaid upon text material, and fed through a braille transcription system using DOTSYS III, to what extent will the resulting product diverge from the "perfect" braille produced by other methods? Obviously, if editing of the braille text can be accomplished on the video display of a small "intelligent terminal," and if formatting difficulties do not vitiate the product obtained by using the DOTSYS III transcription program, then we can foresee a way in which we can significantly reduce the labour and cost of transcribing braille. So far, we can report that a test text drawn from the ink print publication The New Outlook for the Blind has been selected; it was transferred to machine-readable form adding photocomposition codes, with the use of a Datapoint intelligent terminal; resulting in a digital cassette containing text and codes, and through the DOTSYS III system. Preliminary examination of the resulting braille appears very encouraging, although we are unwilling to say more than this before we have made a thorough analysis of the braille copy of the ink print text. Further details and results will be reported in the next Newsletter.

Members of the AFB project group are: L.L. Clark, E. Lang, F. Kalin, R. Snipas, and E. Kramer (see distribution list at the end of this Newsletter).

Some Thoughts on Future Braille Research

P.W.F. Coleman

This paper briefly specifies areas in which I feel research should be progressing. Some of them are being more or less successfully covered. Others either sparsely or not at all. I make no pretence that this paper exhausts the possibilities.

Braille and Software

Programmers of braille translators know well the need for revision and simplification of braille systems. This need should be coupled with research into the factors influencing braille reading speed and comprehension, and the effects on these factors of braille revisions already carried out. Another factor (which is receiving attention at Warwick) relates revision to commonly occurring words and word components in literature of different types.

Not unrelated to this is the work going on to formally define braille systems, with the initial efforts towards producing metalanguages with which to do this. Problems encountered in the search for a metalanguage are special casing, syllabication and hyphenation.

If a formal definition can be made, programming translators become straightforward. In addition, anomalies in the grammar of braille are thrown into relief. Finally, the concept of a program to generate translation programs for different braille systems becomes tenable.

There is a need to standardise internationally braille systems for different disciplines, e.g. mathematics, music and science, for the sake of the blind with a need to read books in their field from different countries. On this score musicians seem to be succeeding at least to some extent where others have failed.

I believe there is both a mathematical and psychological problem in producing a linear (braille) notation from a non-linear (print) one, as is the case with mathematics. The braille notations are very clumsy, and make for difficulty in translation from the thoughts forms of the sighted mathematician to those of the blind one. There is scope for methodical research with the aim of producing an optimum and open-ended international braille mathematics standard.

Another optimisation field is that of tables and diagrams, including maps. With the notable exception of mobility maps, little or no work has been done to find the best ways to present these in braille, and to write programs to automatically reproduce them in the right format.

Braille Production Software

There is a need to lay down the minimum requirements for a quantity braille production system. Recent events in Britain suggest that one component of this system easily overlooked is the proof-correction cycle. It is not sufficient to verify data after input and assume that (a) input is perfectly correct, and therefore that (b) translation will be correct.

Verification can still miss errors, which may then be highlighted during the translation phase; and of course translation itself is most unlikely to be acceptable at the first shot.

There should be greater emphasis on online editing at each stage of the production cycle: for verifying input and proofing translation text (the latter easing special casing and hyphenation problems); and for formatting translated text before printing.

At this point I note that there is no agreed international (or even national) standard for dealing with hierarchies of headings and subheadings. For instance, it ought to be standard to include the current printed book page number in the

heading line on each braille page. Creating a standard for heading hierarchies ought surely to be a trivial task, not really requiring the time and thought of researchers!

Hardware Considerations

There is a great need for a satisfactory bulk braille printing device, possibly some such as the Horvath drum embosser, but in any case which does not use plates as an intermediary; with the growing need for metals and coming exhaustion of primary sources of ore, the price of metal for plates will continue to rise prohibitively.

Certain grades of paper have doubled in price in each of the last two years, and may well repeat this process in 1976. Plastics are also undergoing quite dramatic increases, due mainly to those in the price of oil.

It is time that all these price increases were brought realistically to the attention of the blind consumer, together with the need and possibility of a transient braille output device, e.g., the Argonne Braille Machine. In years to come, such a device might well be linked to an automatic print recognition system, enabling the blind to use normal printed books and still read in braille, and obsoleting the need for a lot of today's braille publication. Research could usefully determine the material that will always be needed in page format.

Meanwhile, for specialised or small volume runs, volunteer transcribing is still used, but volunteers are becoming scarce. There is a need to avoid, if possible, the training cycle - this is not, of course, a new need. A transcription system based on a microprocessor, portable and cheap, would broaden immediately the base from which transcribers could be taken to anyone with reasonable typing ability. Before such a device were designed, there would have to be a study made of the trade off between development and use of such a system, and volunteers being given a terminal for use with a remote machine.

It may be (I believe it is already true) that appropriate cheap key-to-cassette devices already exist which, although no translation would be done at the input stage, could provide a system for acquiring bulk data for brailling cheaply; final editing and translation would occur at a central site with a braille expert present.

Work is needed on a cheaper method of duplicating braille than the Thermoform device. One solution is for a device which senses dot positions to communicate this information to an embosser, resulting in a dot-for-dot copy. Work already done in this field in Britain was discontinued because of creases on the master copy creating "virtual" dots across the output copy. But if the master were crease-free, as it could be if created and copied by the same person, this would be no problem.

A development from the above might be computer input from braille (CIB), in which the above input device communicates to a computer program which translates dot positions into braille characters and stores them as such. Diagrams might also be prepared in this way.* The device could be, I think, a desk-top terminal, very useful to blind programmers and engineers, but also in the computerised preparation of braille literature.

With material stored in the system as braille characters, one can envisage the need for a braille-to-print translation program; this would be used either for communicating with seeing colleagues, or for using a braille file as input to a compiler for a programming language. The task is not necessarily the exact converse of a print-to-braille translation program - one intuitively feels that it is not so exacting.

There is probably sufficient work on computer terminals at present, but there is a distressing tendency for such work not to come to fruition, so a careful watch on the situation

---

* with photoelectric sensing, directly from an ordinary line drawing.

is needed. Both price and servicing have in the past created problems, and future devices of whatever price must be fully supported in the field.

Already blind engineers are encountering difficulties because of the absence of a tactile graphics terminal; (it is depressing that I predicted this in "Computer Terminals for the Blind", Electronics and Power, March 1972, but first given at a seminar in 1970 of the British Computer Association of the Blind - no-one, it seems, took me seriously). This need is also being felt now by blind programmers, and high priority should be given to a tactile graphical display unit.

The earlier talk on braille production suggests the possibility and need for an integrated information system for the blind, at a small price which all can afford, and both portable and easy to use by those having no technical ability. Based on a microprocessor, the device would have both input and output in either braille or speech (not both). The braille version, I suggest, would have a braille keyboard and transient output. (I am designing such a device using no moving parts, apart possibly for the braille display; the main delay will be the development of sufficiently cheap IC storage devices).

Finally, may I mention the need for a portable brailler which is cheap, reliable, and above all silent, and preferably producing braille on both sides of the paper.

General Note on Price

There seems to be a misconception among researchers that there is no need for devices to be cheap. "After all," runs the argument, "being blind, the user does not require a car, nor expenses like a television." It only has to be stated for its folly to be seen, in the context of a fully integrated blind person.

His family wish to have both the car and television that their neighbours have. Blind people do, of course, watch television. Their need for a car is probably much more than

their seeing counterparts, due to difficulties on public transport and bulky apparatus to transport.

Before he starts work on a device, as an integral part of his initial feasibility study, the researcher must take account of this, and not proceed until either he can tailor the device to the pockets of someone already paying through the nose for additional aids, or be sure that finance is forthcoming from elsewhere.

I add this note because, I am sure, this has been the downfall of many a good idea!

National Computing Conference 1976

NCC '76 is being held in the New York Coliseum from 7th - 10th June. There are four sessions of specific interest:

"Computer Terminology Signs for the Deaf"
"Computerised Braille Translation"
"Communication Aids for the Non-Oral"
"Print to Synthetic Speech Reading Machines for the Blind"

Further details of the sessions relating to the visually handicapped can be obtained from R.A.J. Gildea, MITRE Corporation, 433 North Circle Drive, Colorado Springs, Colorado 80909, U.S.A.

This conference may be followed by a workshop on computerised braille but the arrangements have not been finalised. Information on this workshop will be circulated as soon as it becomes available.

Publications and Reports

American Printing House for the Blind "Computer Assisted Translation of Braille Music".

June 1972, July 1973, Dec. 1974, March 1975, June 1975 and Sept. 1975. Copies available from R.H. Evensen, Division for the Blind and Physically Handicapped, Library of Congress, 1291 Taylor Street N.W., Washington D.C. 20542, USA.

These progress reports describe a project for the computer production of braille music with a maximum level complexity of multivoiced music on a single staff.

Coleman P.W.F. "The Search for a Braille Translation Program".

Computer Weekly, 14th August 1975, p. 6.

Coleman P.W.F. "Braille Programs - Part 2: Defining the Language".

Computer Weekly, 21st August, 1975, p. 6.

Douce J.L. "Some Development in Computer-Aided Information Services for the Blind".

Chairman's address to the Control and Automation Division of the Institution of Electrical Engineers on 7th October 1975. Proceedings of the Institution of Electrical Engineers, Vol. 123, No. 1, Jan. 1976, pp. 93-97.

This paper reviews current work on the translation of braille text, music, maps and diagrams. The paper is aimed at scientists and engineers with no previous knowledge of braille or the blind.

Gill J.M. "Non-Visual Computer Peripherals".

Research Bulletin of the American Foundation for the Blind, No. 29, pp. 197-212.

A very brief factual survey of audio and tactual output devices which are either available or under development.

Gill J.M. et alii "Design and Evaluation of a System for the Production of Short Documents in Contracted Braille".

Warwick Research Unit for the Blind, 1975, 184 pp. A few copies are still available from Dr. Gill.

This report describes in detail the first year of operation of a computer-based system. The report includes listings of two versions of DOTSYS III - one in Fortran IV and one in Fortran IV with some Macrosymbol. The latter version uses 13k words of store, with initialisation overlaid, and translates at 5000 words per minute to a good approximation to grade II standard English braille. The report also includes the initial reaction of the users of this system.

Gill J.M. "The Automated Production of Bank Statements in Braille".

Warwick Research Unit for the Blind, December 1975, 85 pp. A few copies are still available from Dr. J.M. Gill.

This report describes in detail a system for producing bank statements in braille from digital tapes supplied by the banks. The report includes listings of the Fortran IV programs to convert from the banks' print-image format to the braille format.

Grootenhuis J. "Automated Braille Production from Compositor's Tapes".

December 1974. Copies available from Drs. J. Grootenhuis, Nederlandsche Blindenbibliotheek, Noordwal 7, Den Haag, The Netherlands.

This 35 page report describes recent work at the Dutch Library for the Blind on the utilisation of punched paper tapes used by printers.

Lawes W.F. "The Feasibility Study into the Usage of Computers by and for the Blind".

January 1975. Copies available from E.J. Venn, Royal National Institute for the Blind, 224 Great Portland Street, London W1N 6AA, England.

This report describes Mr. Lawes's six month study on computerised braille translation. It briefly describes the state-of-the-art and makes precise recommendations regarding the implementation of a computer-based braille production system. Anybody setting up a new system is strongly recommended to read this report.

Patrick P.H. & Friedman P. "Computer Printing of Braille Music using the IML-MIR System".

Computers and the Humanities, to be published. Copies available from Prof. P.H. Patrick, Department of Music, College of Arts and Sciences, The American University, Washington D.C. 20016, USA.

This paper describes a computer-assisted system for producing braille music which does not have more than one note at the same time on a single staff.

CIRCULATION LIST

1 ANDERSSON L.
PROJEKT AB ALEA, HENRIKSBERGSVAGEN 104, S-136 67 HANDEN, SWEDEN.

2 ARCHER MS. M.
RESEARCH LABORATORIES, EASTMAN KODAK COMPANY, 1660 LAKE AVENUE, ROCHESTER, NEW YORK 14650, USA.

3 BAGLEY P.R.
INFORMATION ENGINEERING, 3401 MARKET STREET, PHILADELPHIA, PENNSYLVANIA 19104, USA.

4 BEATTY PROF. K.O.
CHEMICAL ENGINEERING DEPARTMENT, NORTH CAROLINA STATE UNIVERSITY, RALEIGH, NORTH CAROLINA 27607, USA.

5 BECK MRS. J.M.
VOLUNTEER SERVICES FOR THE BLIND, 919 WALNUT STREET, PHILADELPHIA, PENNSYLVANIA 19107, USA.

6 BENHAM T.
SCIENCE FOR THE BLIND PRODUCTS, 221 ROCK HILL ROAD, BALA CYNWYD, PENNSYLVANIA 19004, USA.

7 BOLDT PROF.DR. W.
PADAGOGISCHE HOCHSCHULE RUHR, D 46 DORTMUND, LINDEMANNSTR. 84, WEST GERMANY.

8 BOYLES DR. M.P.
ATLANTA PUBLIC SCHOOLS, 210 PRYOR STREET, ATLANTA, GEORGIA 30303, USA.

9 BROADLEY J.
SCOTTISH BRAILLE PRESS, CRAIGMILLAR PARK, EDINBURGH, SCOTLAND.

10 BROWN D.
CANADIAN NATIONAL INSTITUTE FOR THE BLIND, COMPUTER CENTER, 1929 BAYVIEW AVENUE, TORONTO, ONTARIO, CANADA.

11 BROWN L.
14 BAYLOR AVENUE, WESTBORO, MASSACHUSETTS 01581, USA.

12 BROWN V.
TELETYPE CORPORATION, LITTLE ROCK, ARKANSAS, USA.

13 CARGILL F.R.
BOARD OF VOCATIONAL EDUCATION AND REHABILITATION, ST. OF ILLINOIS, 623 EAST ADAMS STREET, SPRINGFIELD, ILLINOIS 62706, USA.

14 CLARK L.L.
I.R.I.S., AMERICAN FOUNDATION FOR THE BLIND, 15 WEST 16TH STREET, NEW YORK, NY 10011, USA.

15 COLEMAN P.W.F.
COMPUTER UNIT, UNIVERSITY OF WARWICK, COVENTRY CV4 7AL, ENGLAND.

16 DALRYMPLE G.F.
SENSORY AIDS EVALUATION AND DEVELOPMENT CENTER, BUILDING 31-063, 77 MASSACHUSETTS AVENUE, M.I.T., CAMBRIDGE, MASSACHUSETTS 02139, USA.

17 DAUER F.W.
UNIVERSITY OF COLORADO, 113 REED HALL, BOULDER, COLORADO 80302, USA.

18 DOUCE PROF. J.L.
WARWICK RESEARCH UNIT FOR THE BLIND, UNIVERSITY OF WARWICK, COVENTRY CV4 7AL, ENGLAND.

19 DROEGE M.F.
CLOVERNOOK HOME AND SCHOOL FOR THE BLIND, 7000 HAMILTON AVENUE, CINCINNATI, OHIO 45231, USA.

20 EKBERG PROF. S.
DEPARTMENT OF TELECOMMUNICATION NETWORKS AND SYSTEMS, THE ROYAL INSTITUTE OF TECHNOLOGY, S-100 44 STOCKHOLM 70, SWEDEN.

21 EVENSEN R.
LIBRARY OF CONGRESS, DIVISION FOR THE BLIND AND PHYSICALLY HANDICAPPED, 1291 TAYLOR STREET N.W., WASHINGTON D.C. 20542, USA.

22 FERRELL PROF. W.R.
SYSTEMS AND INDUSTRIAL ENGINEERING DEPARTMENT, UNIVERSITY OF ARIZONA, TUCSON, ARIZONA 85721, USA.

23 FORTIER DR. P.A.
DEPARTMENT OF ROMANCE LANGUAGES, UNIVERSITY OF MANITOBA, WINNIPEG, MANITOBA, CANADA R3T 2N2.

24 FOULKE DR. E.
PERCEPTUAL ALTERNATIVES LABORATORY, UNIVERSITY OF LOUISVILLE, LOUISVILLE, KENTUCKY 40208,USA.

25 FRIEDMAN H.J.
HOWE PRESS OF PERKINS SCHOOL FOR THE BLIND, 175 NORTH BEACON STREET, WATERTOWN, MASSACHUSETTS 02172, USA.

26 GILDEA R.A.J.
THE MITRE CORPORATION, 433 NORTH CIRCLE DRIVE, COLORADO SPRINGS, COLORADO 80909, USA.

27 GILL DR. J.M.
WARWICK RESEARCH UNIT FOR THE BLIND, UNIVERSITY OF WARWICK, COVENTRY CV4 7AL, ENGLAND.

28 GROOTENHUIS DRS. J.
NEDERLANDSCHE BLINDENBIBLIOTHEEK, NOORDWAL 7, DEN HAAG, THE NETHERLANDS.

29 GRUNWALD A.P.
ARGONNE NATIONAL LABORATORY, ENGINEERING DIVISION, BUILDING 310, 9700 SOUTH CASS AVENUE, ARGONNE, ILLINOIS 60439, USA.

30 HAHN J.
DIVISION FOR THE BLIND AND PHYSICALLY HANDICAPPED, LIBRARY OF CONGRESS, 1291 TAYLOR STREET N.W., WASHINGTON D.C. 20542, USA.

31 HALLENBECK DR. C.E.
PSYCHOLOGY DEPARTMENT, UNIVERSITY OF KANSAS, LAWRENCE, KANSAS 66045, USA.

32 HAYNES R.L.
AMERICAN PRINTING HOUSE FOR THE BLIND, 1839 FRANKFORT AVENUE, LOUISVILLE, KENTUCKY 40206, USA.

33 HORVATH DIPL.ING. Z.
TRASK DATASYSTEM AB, STOCKSUND, SWEDEN.

34 HUMPHREYS J.
WARWICK RESEARCH UNIT FOR THE BLIND, UNIVERSITY OF WARWICK, COVENTRY CV4 7AL, ENGLAND.

35 HYLAND T.
TRIFORMATION SYSTEMS INC, P.O. BOX 2433, STUART, FLORIDA 33494, USA.

36 IGUCHI J.
TOKYO HELEN KELLER INSTITUTE, 4-170 NISHIOKUBO, SHINJUKU-KU, TOKYO, JAPAN.

37 INGHAM DR. K.R.
AMERICAN SYSTEMS INC, 123 WATER STREET, WATERTOWN, MASSACHUSETTS 02172, USA.

38 JAKOB H.
DEUTSCHE ZENTRALBUCHEREI FUR BLINDE IN LEIPZIG, 701 LEIPZIG, GUSTAV-ADOLF-STRASSE 7 (LOUIS-BRAILLE-HAUS), POSTFACH 245, GERMAN DEMOCRATIC REPUBLIC.

39 JENSEN S.
THE DANISH ASSOCIATION OF THE BLIND, RANDERSGADE 68, 2100 COPENHAGEN, DENMARK.

40 KALIN E.
SCIENTIFIC AMERICAN, 415 MADISON AVENUE, NEW YORK, NEW YORK 10017, USA.

41 KALISKY A.
NATIONAL PHYSICAL LABORATORY OF ISRAEL, GIVAT RAM, 91999 JERUSALEM, ISRAEL.

42 KEEPING D.
UNIVERSITY OF MANITOBA, 118C ENGINEERING BUILDING, WINNIPEG, MANITOBA R3T 2N2, CANADA.

43 KLITZNER H.
STATISTICS DEPARTMENT, BARUCH COLLEGE/CUNY, 46 EAST 26TH STREET, NEW YORK, NEW YORK 10017, USA.

44 KNOCK E.
ARKANSAS ENTERPRISES FOR THE BLIND, 2811 FAIR PARK BOULEVARD, P.O. BOX 4055, ASHER AVENUE STATION, LITTLE ROCK, ARKANSAS 72204, USA.

45 KRAMER MRS.
LIGHTHOUSE LIBRARY SERVICES, NEW YORK ASSOCIATION FOR THE BLIND, 111 EAST 59TH STREET, NEW YORK, NEW YORK 10022, USA.

46 KUEPPERS DR.ING. H.J.
STIFTUNG REHABILITATION, D-69 HEIDELBERG, POSTFACH 101 409, WEST GERMANY.

47 KUIPERS J.W.
NEDERLANDSCHE BLINDENBIBLIOTHEEK, NOORDWAL 7, THE HAGUE, THE NETHERLANDS.

48 LAGRONE R.
CROSS INDUSTRY DEVELOPMENT, IBM DATA PROCESSING DIVISION, BUILDING 803 Q037, 1501 CALIFORNIA AVENUE, PALO ALTO SQUARE, PALO ALTO, CALIFORNIA 94304, USA.

49 LANG MS. E.
DATA OPERATIONS INC, 330 WEST 34TH STREET, NEW YORK, NEW YORK 10017, USA.

50 LEFFLER DR. L.
ARGONNE NATIONAL LABORATORY, 9700 SOUTH CASS AVENUE, ARGONNE, ILLINOIS 60439, USA.

51 LEVINE MRS. L.M.
NATIONAL BRAILLE ASSOCIATION, 85 GODWIN AVENUE, MIDLAND PARK, NEW JERSEY 07432, USA.

52 LEWIN F.
CONTROL COMPUTING LABORATORIES, SCHOOL OF ELECTRICAL ENGINEERING, UNIVERSITY OF NEW SOUTH WALES, P.O. BOX 1, KENSINGOONY NHS.W., AUSTRALIA 2033.

53 LINDSTROM DR. J.I.
HANDIKAPPINSTITUTET, FACK, S-161 25 BROMMA 1, SWEDEN.

54 LOEBER N.C.
IBM CORPORATION, SDD - LOS GATOS LABORATORY, P.O. BOX 66, LOS GATOS, CALIFORNIA 95030, USA.

55 LOOIJEN M.
REKENCENTRUM T.H.-DELFT, MICHIEL DE RUYTERWEG 10-12, DELFT, NETHERLANDS.

56 MANN PROF. R.W.
DEPARTMENT OF MECHANICAL ENGINEERING, MASSACHUSETTS INSTITUTE OF TECHNOLOGY, CAMBRIDGE, MASSACHUSETTS 02139, USA.

57 MEISCHNER ING. G.
GUREG-ELEKTRONIK, D-8013 MUENCHEN - HAAR, ZUNFTSTRASSE 11, WEST GERMANY.

58 MERZ J.R.
AUTOMATION INDUSTRIES INC, VITRO LABORATORIES DIVISION, 14000 GEORGIA AVENUE, SILVER SPRING, MARYLAND 20910, USA.

59 METTERS DR. J.S.
DEPARTMENT OF HEALTH AND SOCIAL SECURITY, ALEXANDER FLEMING HOUSE, ELEPHANT AND CASTLE, LONDON SE1 6BY, ENGLAND.

60 MORRIS F.
EDUCATION SERVICES CENTER, COMPUTER SERVICES, 2000 WEST LOOP SOUTH, HOUSTON, TEXAS 77027, USA.

61 MULHOLLAND MS. M.E.
AMERICAN FOUNDATION FOR THE BLIND, 15 WEST 16TH STREET, NEW YORK, NY 10011, USA.

62 MUNDY G.W.
CLOVERNOOK PRINTING HOUSE FOR THE BLIND, 7000 HAMILTON AVENUE, CINCINNATI, OHIO 45231, USA.

63 MURNAME PROF. J.I.
DEPARTMENT OF ENGLISH AND MODERN LANGUAGES, AHMADU BELLO UNIVERSITY, ZARIA, N.C. STATE, NIGERIA.

64 NAHAS J.J.
DEPARTMENT OF ELECTRICAL ENGINEERING, UNIVERSITY OF NOTRE DAME, NOTRE DAME, INDIANA 46556, USA.

65 PATRICK PROF. P.H.
DEPARTMENT OF MUSIC, AMERICAN UNIVERSITY, WASHINGTON D.C. 20016, USA.

66 PENKSA J.
WARSAW, BIALOBRZESKA 53, POLAND.

67 PERRY P.
IRS PUBLICATIONS SERVICE BUREAU, 1111 CONSTITUTION AVENUE N.W., ROOM 1550, WASHINGTON D.C. 20224, USA.

68 VAN DER POEL PROF.DR.IR.
DELFT UNIVERSITY OF TECHNOLOGY, DEPARTMENT OF MATHEMATICS, 132 JULIANALAAN, DELFT, THE NETHERLANDS.

69 POTTER S.
STATE SERVICES FOR THE BLIND, 1745 UNIVERSITY AVENUE, ST. PAUL, MINNESOTA 55104, USA.

70 PRICE REV. W.
PROTESTANT GUILD FOR THE BLIND, 456 BELMONT STREET, WATERTOWN, MASSACHUSETTS 02172, USA.

71 RICHARD MLLE. M.
CONSERVATOIRE NATIONAL DES ARTS ET METIERS, 292 RUE SAINT-MARTIN, 75141 PARIS CEDEX 03, FRANCE.

72 ROUSE R.D.
HADLEY SCHOOL FOR THE BLIND, 700 ELM STREET, WINNETKA, ILLINOIS 60093, USA.

73 SAKAI PROF. T.
DEPARTMENT OF INFORMATION SCIENCE, KYOTO UNIVERSITY, KYOTO, JAPAN.

74 SANTANA DR. J.R.
UNIVERSITY OF PUERTO RICO FACULTY, APARTMENT B-7, RIO PIEDRAS, PUERTO RICO 00931.

75 SCHENK H.H.
DEUTSCHE BLINDENSTUDIENANSTALT, D-355 MARBURG/LAHN, AM SCHLAG 8, WEST GERMANY.

76 SCHOPPER J.
BAYER. LANDESSCHULE FUR BLINDE, D-8000 MUNCHEN 60, WINTRICHRING 84, WEST GERMANY.

77 SCHUMAN E.V.
COMPUTER SCIENCE CENTER, UNIVERSITY OF MARYLAND, COLLEGE PARK, MARYLAND 20742, USA.

78 SIMPSON DR. S.
DUXBURY SYSTEMS INC, DUXBURY, MASSACHUSETTS, USA.

79 SNIPAS R.J.
TRIFORMATION SYSTEMS INC, 166 SOUTH BAY AVENUE, FREEPORT, LONG ISLAND, NEW YORK, USA.

80 SORKE W.
D-8941 BUXHEIM, STIFTERSTR. 2, WEST GERMANY.

81 SPANJERSBERG A.A.
DR. NEHER LABORATORY, ST. PAULUSSTRAAT 4, LEIDSCHENDAM, THE NETHERLANDS.

82 SPANJERSBERG H.A.
UNIVERSITY OF TECHNOLOGY, DEPARTMENT OF ELECTRICAL ENGINEERING, LABORATORY FOR DATA PROCESSING, MEKELWEG 4, DELFT, THE NETHERLANDS.

83 SULLIVAN J.E.
3 CLOVER HILL ROAD, ACTON, MASSACHUSETTS 01720, USA.

84 SWAIL J.C.
RADIO AND ELECTRICAL ENGINEERING DIVISION, NATIONAL RESEARCH COUNCIL OF CANADA, OTTAWA, ONTARIO K1A 0R8, CANADA.

85 TAYLOR J.A.
COLUMBUS TECHNICAL INSTITUTE, 550 EAST SPRING STREET, COLUMBUS, OHIO 43215, USA.

86 TRUQUET MLLE. M.
9 RUE ALAIN LESAGE, RESIDENCE SEMIRAMIS, 31400 TOULOUSE, FRANCE.

87 VINDING J.
DANSK BLINDESAMFUND, RANDERSGADE 68, 2100 COPENHAGEN 0, DENMARK.

88 VLIEGENTHART M.J.
DRAVIKSTRAAT 24, GELDORP, THE NETHERLANDS.

89 VRANA ING. K.
VYVOJOVE DILNY CS. AKADEMIE VED, HUSOVA 4, PRAHA 1, 110.00 CZECHOSLOVAKIA.

90 WERNER PROF.DR. H.
44 MUNSTER/WESTF., BESSELWEG 8, WEST GERMANY.

91 WEST MISS S.R.
DEPARTMENT OF HEALTH AND SOCIAL SECURITY, ALEXANDER FLEMING HOUSE, ELEPHANT AND CASTLE, LONDON SE1 6BY, ENGLAND.

92 WESTLAND IR. A.N.
TECHNOLOGICAL UNIVERSITY DELFT, LEEGHWATERSTR. 3, DELFT, THE NETHERLANDS.

93 WILLETT W.W.
NATIONAL BRAILLE PRESS, 88 ST. STEPHEN STREET, BOSTON, MASSACHUSETTS 02115, USA.

94 ZAWISTOWSKI W.A.
00-£01 WARSZAWA, COMPUTATION CENTRE, P.O. BOX 22, PALACE OF CULTURE, POLAND.

BRAILLE AUTOMATION NEWSLETTER

August 1976

edited by

J.M. Gill and L.L. Clark

Warwick Research Unit for
the Blind,
University of Warwick,
Coventry CV4 7AL
England

Basic and Programmatic Research
Division,
Department of Research and
Technological Development,
American Foundation for the
Blind,
15 West 16th Street,
New York, New York 10011
U.S.A.

Contents

	Page
Editorial	3
The Use of Digitally-Stored Text for Braille Production by J.M. Gill	6
Project Braille 2000 by R.P. Vickery, L. Helmer, and J. McCubbin	11
Computer-Assisted Braille Production Capability by P.R. Bagley	15
A Feasibility Study on a Braille Transcription Service for Short Documents by J.M. Gill and J.B. Humphreys	19
Rationalisation of Braille Book Printing by J.L. Douce	25
A Guideline for the Improvement of Braille Production by Computer by P.R. Bagley	31
Duxbury Systems	35
Using Punched Cards for Automated Braille Embossing by N.C. Loeber	37
KOBRL Numeric Code: An Inkprint Output for Computer Transcribed Braille by K.O. Beatty	39
SNOBRL Transcription of Inkprint into KOBRL Numeric Code by K.O. Beatty	42
SAMBA and RUMBA: Systems for Computer Assisted Translation of Braille Music by W. Watkins and J. Siems	47
Computers and Music Braille by P. Howard Patrick and Rosalind E. Patrick	52
Computer Coding of Music Scores Using an On-Line Organ Keyboard by S.G. Gillies and S.J. Goldsack	62

Page

Translating DARMS into Musical Braille by B. McLean 65

Computer-Assisted Transcription of Braille Music by Sally Wilkinson 68

Computerised Braille in the Netherlands by M.J. Vliegenthart 72

A Braille Letterpress for the Blind by G.W. Ohlson and Frank A. Saunders 73

French Embosser/Terminal 80

The Maure "Smart" Terminal System 82

Grade II French Automated Braille by J.M. Charpentier 85

Braille Projects at Paul Sabatier University of Toulouse by Monique Truquet 88

Research at Münster University by H. Werner 90

Automated Braille Research at the National Physical Laboratory by J. Howlett 91

Recent Publications 92

Revised or New Addresses 93

Editorial

Since the present issue of the BAN is issued shortly after an important meeting which discussed changes in the rules of braille, it seems appropriate to mention it in the present context of an editorial statement. It is appropriate not only because the readership of this modest publication has escalated significantly since its first issue (from 94 to about 150); and among this population of readers there are undoubtedly some who, like some of the authors in this issue, look for changes in the rules of braille that will simplify the task of automatic translation of ink print into braille. It is also appropriate because the process of accommodating the needs of the ultimate reader and the needs of the researcher and developer who seeks to serve him are being aired in a fresh and invigorating climate of change.

The meeting of which I speak was sponsored by two organisations: the AFB, and the Special Interest Group on Communications for the Physically Handicapped of the Association for Computing Machinery (SIGCAPH/ACM). SIGCAPH has been in existence for almost a decade, and its Chairman, Robert Gildea, has been an important leader in the effort to apply computer techniques to braille translation - a fact which we neglected to mention in our last, and for which we offer our apologies. Mr. Gildea was also the chairman of the meeting, whose working title was The Workshop on Compliance of Computer Programs with English Braille, American Edition (Literary Braille). Readers of the Newsletter will each receive individual copies of the proceedings of this meeting when these are ready, at the end of Summer or the beginning of the Fall.

I wish to make two observations about the meeting, with no intention of discussing the content of the many discussions.

The first is that the meeting represented a signal event in the encountering of skilled braillists and proofreaders and the researchers and developers involved in adaptation of computer hard- and software for the trans-

cription of ink print into braille. It was striking to observe the relatively rapid evolution of new postures of these two groups, one toward the other. On the one hand, one could see the growing admiration of the researchers for the logic and even the elegance of the braille rules, along with a new appreciation of the painful process through which the present system of (American) braille emerged out of the "war of the dots" in the early decades of this century in the USA.* By the middle of the meeting, in walking around to visit each of the seven separate workshop groups, the observer was struck by the new sense of confidence with which researchers were proposing simplifications and rationalizations of the rules of braille.

The second observation was the display of excited discovery on the part of the skilled braille transcribers and proofreaders at the meeting when they found that the braille versions of the prepared position papers were transcribed entirely without human intervention (from a machine-readable version of the ink print text, which was then processed through a standard braille transcription program in a medium-sized computer). More than one reader of the braille versions of the papers remarked that it was hard to believe there were so few errors in the text; one even said that it was hard to believe these were done by computer (!). One comment may be cited as typical: "I never believed that computer prepared braille could be so good." This sense of how near we are to the goal of completely automatic transcription of ink print into braille was heightened in quite new ways during the meeting; and made more believable the reports that it was quite common for users of computer-produced braille materials not to realise that some systematic errors in the text existed at all.

The atmosphere was never more ripe, therefore, for the proposal that we consider the ideal goal to be the creation of a single standard for braille rules of contraction and of format, one that would obtain both for computer trans-

---

*Irwin, Robert B. The War of the Dots New York: AFB, 1962, (MSC141, 56pp $2.00).

cription and for braille produced by other means, and one establishing continuity with the evolution of braille rules during the last fifty years. An exciting prospect, indeed; and plans for the research that would help bring about this state of affairs were discussed in brief (cf. Douce and Tobin, BAN, Issue No. 1).

To imitate the famous paper by Crick and Watson on the double helix: the implications of the above for simpler programs and smaller computers may be easily inferred. The editors are not unmindful that de facto or de jure versions of single-standard braille rules have already been implemented in other countries in the world - most notably in Denmark by Jensen and Vinding, and in Germany by Helmut Werner, among others. Whilst they are stifling a yawn and comfortably sipping their Schnapps, we can compliment some of our colleagues on their foresight and energy, and we thank them for providing us with the models that helped one part of the English-speaking community of braille publishers and readers in the same general direction...

The Use of Digitally-Stored Text for Braille Production

J.M. Gill
Warwick Research Unit for the Blind

Summary

This paper describes some of the possibilities for utilising text stored digitally for automatically producing contracted braille. It is suggested that this type of data input could greatly increase the availability of straightforward braille text.

Introduction

In most countries the standard braille code uses contractions and abbreviations which are governed by a complex set of rules. The use of contractions typically results in 26% reduction in the number of cells required, but it necessitates the use of skilled transcribers, or a computer, to produce contracted braille. The prime motivation for automation, up to the present time, has been the shortage of skilled transcribers rather than cost saving, either projected or actual.

The automation of the translation process is not simple since contracted braille is a language and not a code; for instance, the use of a contraction is sometimes governed by pronunciation, meaning or the presence of particular adjacent words. This presents formidable difficulties if perfection is required but existing computer programs often have error rates of about one incorrect choice of contraction per five pages which most users find acceptable.

A current automated translation system with manual input of data includes the following processes:

(i) A typist keys in the text adding a few control characters, for new paragraph etc.

(ii) A line-printer listing of the text is produced in order to proof-read for typing errors.

(iii) The text is interactively edited on a visual display unit.

(iv) The text is translated to contracted braille; a translation speed of 5000 words per minute can be achieved on a medium-sized machine.

(v) The braille is output on an embosser (a line embosser can output 120 braille cells per second).

Typically, a good typist would take about 44 hours to type, proof-read and edit one hundred thousand words, translation would take 20 minutes and output 1 hour.

Automated Systems

With manual input of material, a large proportion of the total cost of producing the braille-coded data is that allocated to data input and checking. To reduce this component, experiments have been undertaken to investigate the transcription of material available in machine readable form. The current status of some of these projects is as follows:

Telephone Directories

Many organisations use computers or word-processing typewriters to produce their internal telephone directories. Since many blind employees rely heavily on use of the telephone, a braille directory can be invaluable. The conversion of the digital data to braille is relatively trivial since the data is usually in a fixed format. At

the University of Warwick, the internal directory is now computer-based, and the data base is used for both the ink-print and braille editions. A valuable incidental advantage is that this directory can now be produced with both alphabetical and departmental listings.

Bank Statements

Lack of privacy is one of the most serious deprivations caused by blindness, therefore the availability of bank statements in braille can be very important to some blind individuals. The braille statements can be automatically produced from a digital magnetic tape supplied by the bank. The data is in print-image format but without the customers' names and addresses in order to maintain confidentiality. The main advantages of an automated system are speed, accuracy and cost saving when compared with manual transcription.

Current Alerting Services

A blind professional has special problems in keeping up to date in his own field. He needs a means of identifying what is relevant to him from the current literature. This problem is particularly acute for blind scientists and computer programmers.

The sighted can use information services such as INSPEC and Psychological Abstracts to identify articles likely to be of interest. Since these services are computer-based, it has been possible to run a pilot scheme for automatically producing selective listings, in braille, of abstracts for individual blind programmers and psychologists. This would have been uneconomic by manual transcription which would also have introduced a considerable time delay.

Printers' Tapes

The traditional composing systems involves an operator inputting the text on a special keyboard and the data is punched on wide Monotype tapes. The typing errors are corrected using a pair of tweezers to make alterations to the metal type. However there are some newer computer-based systems which incorporate interactive editing and produce a virtually error-free computer-compatible digital tape.

These tapes contain the control commands for the type-setting machine as well as the text; typically the control commands account for 20% of the data on the tape. The problem is to convert these control commands to the ones needed by the braille translation program or to modify the braille translation program to directly accept these tapes.

For straight-forward text a simple table-driven pre-processor can be written to accept tapes from a variety of printers. However there are some minor problems such as footnotes which are normally incorporated in the main text in the braille edition. Page numbers and running headings can also be handled automatically in most cases.

It is harder to recognise foreign words and phrases which, by convention, are translated into uncontracted braille. The major problems start when position on a printed page is used to convey part of the information e.g. in mathematics, music and tables. It would be technically feasible to automatically transcribe simple tables but complex ones will always require some formatting instructions from a human operator.

Conclusions

For simple text it has proven possible to automatically produce braille from the digital tapes used for preparing

the inkprint version. However it is only now that serious attempts are being made to assemble information on sources of 'clean' text in digital form. In the next few years, as the printing industry gradually changes to computer-based composing systems, the availability of braille could be significantly increased. It is also technically feasible to eliminate multiple typing of material when inkprint, large print and braille editions are required.

Acknowledgements

The financial assistance of the Department of Health and Social Security is gratefully acknowledged.

Project Braille 2000

R.P. Vickery, L. Helmer and J. McCubbin

Our project was funded by a grant from the Canadian Federal Government under their Local Initiatives Program. The aim of the project was to investigate braille production from the point of view of the printing industry, the theory being that as braille and printing are both reprographic sciences, many printing techniques could be beneficial for the production of braille matter.

Lithography

It would appear that the only areas Lithography can be utilized lie in the combination of Lithography and Thermography to give a solid dot formation and the use of used Aluminium Lithographic plates to replace Zinc stereomasters.

Thermography

The principle of solid dot formation in braille production appears to be going through a change in its popularity at the moment, and this formation is the only way that Thermography can be used for braille matter. A form of solid dot could be produced with the inclusion of a red pigment in the medium to create a heat reflectant, the loss of image height inherent in this process could possibly be counteracted with this application.

Silkscreen

Silkscreen plays a prominent role in the printing industry due to its ability to apply a thicker ink image. The possibility of applying a large enough image to give a solid dot formation could be looked into and possibly better thermographic results would be obtained with the application of a resinous substance to give a plastic dot using the larger ink deposit available. With respect to image clarity,

photomechanic techniques should be investigated for their use as a master. We have begun to look into reports of screen dot sizes of up to 150 lines per inch (60 lines per cm) by German firms, which would exceed sharpness requirements and the use of rotary silkscreen equipment, which would certainly be advantageous to the silkscreen solid dot theory in terms of added speed.

To obtain optimum image quality, the direct-indirect method of making screens would seem to be the most suitable. This is the most recent innovation in the manufacture of Stencils, combining the best properties of the two older methods; the direct method and the indirect method. According to the direct-indirect method, unsensitized photographic emulsion, normally of polyvinyl alcohol and polyvinyl acetate, is applied precoated, on a plastic film carrier, which is put emulsion-side-up on a pre-stretched screen mesh. The top side of the screen mesh is coated with sensetized emulsion which wets and as a consequence, sensetizes the pre-coated layer. The two layers fuse together and are dried. The support film is then removed and the screen is ready for exposure.

One drawback in doing image deposits with silkscreen would be the drying factors of the ink. Solvent based inks would be of little use without expensive modifications to silkscreen equipment to retrieve the solvent. What would be required would be a water based ink or an ink requiring UV curing. These inks are potentially available in the printing industry.

Letterpress

Letterpress would be the most advantageous system since it could utilize the basic form of letterpress which is a raised image. Two ways of producing an embossed effect through letterpress would consist of (1). A form of Honeycomb with the recessed image corresponding to the 6 dot formation of a braille cell which would cover the entire surface of the platen. It would then become a matter of supplying the

type matter with the braille configuration. (2). A system consisting of rubber sheeting which would cover the platen allowing the indent produced by the raised braille characters to be accepted. To produce braille images using type economically, hot-metal machines could be incorporated (linotype, intertype, monotype). Matrices are already available for the linotype system (Specification 18-348 Universal Braille, Characters 166-173).

We ourselves have successfully produced braille by utilizing the latest techniques in the newspaper industry through the use of a plastic stereo. By this method, we produced an ink original of a braille page. Negatives were made, and plastic stereos were produced by the Mirror-Graph Plastic Stereo Production System, which the newspaper industry are converting to on the North American market. These plates were used to produce braille on a hand operated press.

Photocomposition

With the possibility of braille being produced using printing techniques, the setting of braille matter could be undertaken through the use of photocomposing systems. With only few modifications required, a braille translation program could be included with the justification hyphenation text program and a grid with the appropriate braille characters in the phototypesetting device. There would be two ways of approaching this production method. One would be the re-keyboarding of printed matter and subsequent conversion to braille in a computer environment. The second would be a further addition to the computer system, enabling original printers tapes to be regenerated into a braille production form. An example would be the case of deletion of a typeface change command or the addition of a numerical braille sign.

It should be remembered at this point that large quantities of printed matter are produced by using information at one stage or another that is in machine readable form.

With the cooperation of printers and publishers, large amounts of printed material could be produced in braille with the use of a braille translation program i.e. Dotsys III and the LED-120 braille embossing device.

Paper

The paper used in braille production at the present is of the soft fibrous type. Possibly better image retention would be obtained if a machine finished paper is used with the drying taking place at the stage of having the finish applied. Also the application of heat on braille presses to aid in the bending of the fibres, would produce better image retention and prevent subsequent breakage of the fibres.

Storage of braille books and braille paper should be in humidity controlled areas to obviate swelling and distortion of the paper. Due to the radical rise in paper cost, the use of plastic papers need to be investigated for their possible use in braille publications and for their resistance to the atmospheric problems which are encountered by the ordinary paper. Although plastic papers are also increasing in cost, the comparative ease of recycling might render their future use attractive.

The final result of the program shows that there are many areas in which the printing industry could collaborate in the production of braille. The most obvious is the case of Error Free Compositors tapes, this approach especially in conjunction with the Printing and Publishing industry would create a great saving, not only in equipment but also in time.

One thing we had to keep in mind was that the printing industry is geared for mass production whilst braille requirement are of a small order, so that cost factors cannot be assessed on a one to one basis, but if braille matter could be understood to be a single entity incorporating stages of the printing process the expense requirements would be kept to a minimum.

Computer-Assisted Braille Production Capability

P.R. Bagley

Information Engineering operates a computer-assisted braille production system jointly with another organization. Our combined staffs can handle every aspect of production - from initial preparation of text and indexes, through translation into braille, proofreading, correction, embossing, binding, labelling, packing, and shipping.

Material to be brailled is first put into machine-readable form, expressed in conventions acceptable to a braille translation program. Magnetic tapes used to typeset printed text are already in the machine-readable form, but must be reformatted by computer program before translation into braille.

The Master Tape Reformatting Program performs the following functions:

(1) It substitutes words and phrases where an ink print character lacks a corresponding braille character (e.g., the mathematical symbol "+" becomes "plus").

(2) It converts the typesetting commands into corresponding braille formatting commands (e.g., for headings, italics, etc.)

(3) It converts upper-lower case ink print representation to a braille representation which is all one case, with all capitals preceded by a character denoting "capital sign."

The output of the reformatting program is in the form of punch cards, which are then listed and proofread.

It is often the case that the document is not available on magnetic tape, or that parts of it are not on the tape.

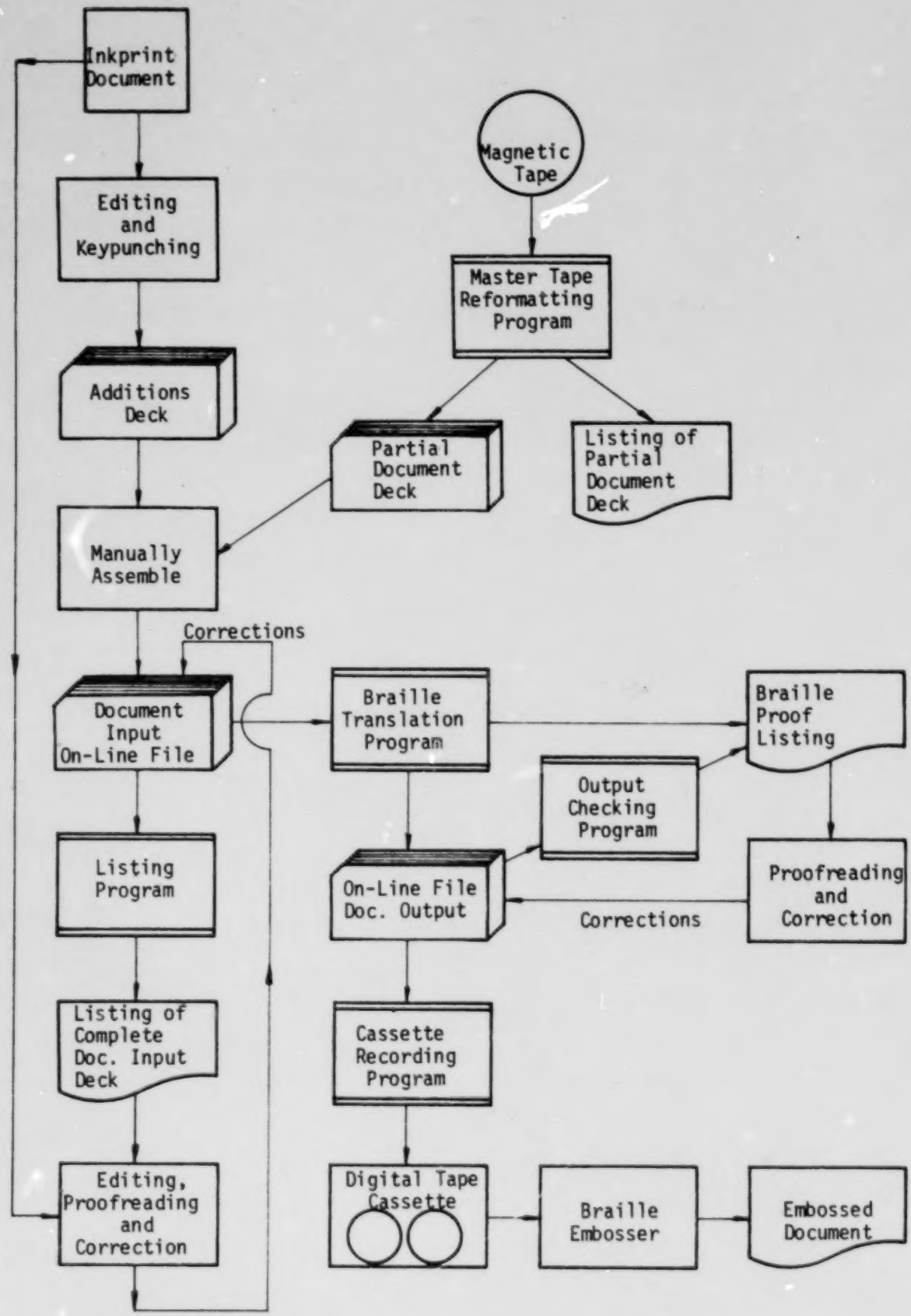

FIGURE 1. Information Flow Chart for Computer-Assisted Braille Production.

Missing text, title pages, tables, and charts must be keypunched from the ink print copy - after editorial decisions have been made and noted. For example, it is sometimes clearer to present tables and forms in prose, rather than to display them as they appear in ink print.

The keypunched additions are manually combined with the deck produced by the reformatting program to form the Document Input File. After the deck is listed, proofread for content and format, and corrected, it is ready to be processed by the Braille Translation Program.

The Braille Translation Program converts the Document Input File into Grade 2 braille, formatted into pages. Both a Document Ouput File and a proof listing are produced by the Braille Translation Program. The output file represents line-for-line and character-per-character the braille pages which will be produced. The proof listing shows the braille output in ink print characters so that sighted proofreaders can check for content, format, and correctness of translation. It is therefore not necessary for the proofreader to know how to read braille. Minor errors can be fixed by on-line editing of the output file (on-line). Major errors require that the input file be corrected, and portions of it be retranslated.

Finally, one or more output files can be combined and their contents recorded on digital tape cassettes. These cassettes drive an embossing machine to create any specified number of embossed copies. Continuous form "tag" paper is used, with embossing only on one side. A bursting machine has been adapted to separate the embossed sheets without crushing any of the dots. The final stages of labelling, binding, and packing the volumes are then carried out by manual methods. In addition to, or instead of, being used for embossing, copies of the cassettes are distributed to those having embossing machines.

The current cost of computer-produced braille is unfortunately not as low as the cost of braille prepared by traditional methods. The amount of tabular material to be reworked affects the per-page price. The main component of total cost is the editorial work and proofreading, made necessary largely by the complexity of the rules for the braille language. Other singificant costs are the expense of special heavyweight braille paper stock, and the cost of running the translation program. Information Engineering is constantly looking for ways in which the various production costs can be reduced.

Despite the present expense of computer-assisted braille, this method is advantageous in any of the following circumstances:

(1) Where speed of preparation is highly important.

(2) Where text to be brailled is already in machine-readable form.

(3) Where the document will be issued in one or more revisions.

(4) Where the number of copies to be made is too small to justify making zinc plates to be run on a braille embossing press.

In the past 3 years, Information Engineering has prepared many thousands of pages of braille. Our experience includes processing charts, tables, and forms. Especially challenging was working out the representation of boards and men for a translation of a book of chess problems.

The kinds of publications which we think are suited to our capabilities include reference documents, directories,

newsletter, bank brochures, annual report conference announcements and proceedings, school materials (assignments, reading materials, quizzes, games), and instruction manuals.

Translation and other computer processing is done at the computer facilities of the UNI-COLL Corporation, Philadelphia. Editorial, embossing, and binding services are provided by Volunteer Services for the Blind, Philadelphia.

A Feasibility Study on a Braille Transcription Service for Short Documents

J.M. Gill and J.B. Humphreys

Introduction

Braille readers often have problems in having short documents transcribed quickly into contracted braille. Typical documents are agendas and minutes of meetings, instructions for domestic appliances, local telephone dialling codes, knitting patterns and personal correspondence needed for reference. Typically the number of copies required is from one to six. This project is concerned with investigating the viability of using a computer-based transcription system based on existing technology.

Basic system

The basic system for producing short documents in contracted braille is:

(i) A typist, with no computing knowledge, inputs the text on punched cards, paper tape or directly on a visual display unit. Control characters, for new paragraph etc., are also added by the typist as she inputs the material (i.e. the text is not annotated by someone else).

(ii) A line printer listing of the text is produced in order to proof-read for typing errors.

(iii) The text is interactively edited on a visual display unit with a program designed specifically for this purpose. This program has been designed for speed of operation, minimal computing requirement and for ease of use by operators with no experience of computing.

(iv) The text is translated to a good approximation to Grade II standard English Braille, and the translation is stored on magnetic tape.

(v) The braille is output on an on-line embosser.

Only the translation phase requires extensive central processor time; all other computer operations use less than 1% of the central processor time, and can be time shared with other unrelated programs.

The current output of the system is about 20,000 braille cells (circa 30 pages) per day. Allowing for multiple copies, such that on average about two copies of each document are produced, this means that 15,000 braille cells are translated per day, requiring about one to two minutes of central processor

time for translation. It is not envisaged that this can be increased with existing facilities (particularly staff) since the typist is currently the only full time worker on this project, and she also undertakes all proof reading and routine secretarial duties associated with the project.

Translation Program

The Sensory Aids Evaluation and Development Center provided Warwick Research Unit for the Blind with a copy of DOTSYS III which is a program, written in Cobol, to translate text to a good approximation to Grade II standard American-English Braille. The version currently in use at Warwick uses 13k words of store with initialisation overlaid and translates at 5000 words per minute to a good approximation to Grade II standard English Braille.

Evaluation

In order to evaluate the system a small scale pilot service was operated for producing single copies of short documents for blind subjects. In the first few months of operation the system was undergoing almost continual modification based on informal feedback from the blind subjects which made it impractical to start a formal evaluation programme.

The material transcribed can be roughly grouped as:

Subject	%
Domestic	10.4
Leisure	15.4
Religious	2.5
Education	25.4
Employment	29.1
Miscellaneous	17.2

Errors can be caused by typing errors in the text, incorrect control characters, incorrect choice of contraction by the computer program, malfunction of the embosser or damage to the braille in transit. Little is gained by just measuring the number of miscontractions caused by the translation program unless one also measures the error rates for the various systems using manual transcribers. Once the error rate is relatively low, it becomes a very expensive operation to attempt to measure it accurately.

A practical measure of the error rate is the number of users who find the number and types of errors unacceptable for their application. For instance any error in a list of telephone numbers is serious, but a miscontraction may often go unnoticed.

A braille questionnaire was circulated to subjects who had used material generated by the most recent system. The results are (N=23):

1. Mean age = 40.3 years (σ = 12.6 years)

2. Occupations

Professional	9
Non-professional white-collar	7
Students	2
Manual workers	1
Not employed	4

"The following 4 questions use a 1 to 5 scale for answering. For example 1 is very poor, 2 poor, 3 average, 4 good and 5 very good. You should just write down the number which best describes your own opinion. In these questions I have just given you the end points on the scale although you can answer with any number between 1 and 5".

	mean	σ
3. For your applications, the turnround time is: (1 is so slow as to make the service useless and 5 is perfectly acceptable).	3.8	0.9

		mean	σ
4.	Are the miscontractions caused by the computer program: (1 is so bad as to stop you using the service and 5 is perfectly acceptable).	4.6	0.6
5.	Is the physical quality of the braille: (1 is very poor and 5 is good).	4.3	0.9
6.	Is single-sided, as compared with double-sided, embossing: (1 is so severe a disadvantage as to stop you using the service and 5 is perfectly acceptable).	4.9	0.3

7. If there was a central document transcription service, or a number of regional ones, how much would you use it on average (braille pages per month):

1. less than 10
2. 10 to 50
3. 50 to 100
4. 100 to 1000
5. more than 1000

mean = 2.5
σ = 0.9

8. Would you want the document service to transcribe specialist braille codes such as music, mathematics and computing? If so, which ones?

Code	Number
Music	6
Mathematics	1
Computing	1

9. How many embossed diagrams would you want per month (on average):

1. none
2. less than 1
3. 1 to 100
4. 10 to 100
5. more than 100

mean = 1.4
σ = 0.6

Firm conclusions cannot be drawn from the survey due to the small sample size. However these results show that both the number of miscontractions and the use of single-sided braille are acceptable for this application. The lowest score was for turn-round time which varied from a few hours to two weeks for short documents.

Conclusions

This project has demonstrated that there is a considerable demand for short documents in braille, and that computer-based systems can potentially satisfy a significant proportion of this demand.

Acknowledgements

The project was funded by the Royal National Institute for the Blind and the Department of Health and Social Security, and the Science Research Council provided the essential computing facilities.

Further Information

Gill J.M. et alii "Design and Evaluation of a System for the Production of Short Documents in Contracted Braille". Warwick Research Unit for the Blind, 1975, 173 pp.

Rationalisation of Braille Book Printing

J.L. Douce

A seminar was held on 3rd-4th May 1976 at the Rehabilitation Foundation, Heidelberg, W. Germany, to discuss the results of a major research project concerned with improving the availability of braille books. Attended by over fifty delegates from nine countries, the meeting included formal presentations by the group leaders of each section of the work, visits to inspect aspects of the work in the laboratories and extensive discussion periods.

This note is a personal record of the activities; accurate in so far as my memory permits, but not to be quoted as official statements in any way. Extensive documentation has been produced by Dr. Hans-Jochen Kuppers, Stiftung Rehabilitation, 6900 Heidelberg 1, West Germany 101 409, and I am grateful to him for much technical information.

The research has been specifically aimed at book production, with eventual printing from embossed plates in mind, and five particular aspects were identified as areas requiring attention before a well-organised production process could be founded. Thus the following topics have received particular attention:

1. Input of material by typist, or from paper tape.

2. Editing of material, using a V.D.U. computer terminal or a special purpose device with braille input/output.

3. Translation to (German) grade II braille.

4. Output to zinc plates.

5. Production of tactile diagrams.

The first morning was devoted to presentations, the afternoon to a tour of the equipment, with the second day devoted to further detailed discussions and finally a visit to the education department where the disabled (not solely visually handicapped) are taught professions appropriate to their handicap.

The project, costing about $300,000 seems to have been very largely successful, due to the proper amount of resources being made available, and the skills of the teams at Heidelberg, Stuttgart and Munster in defining and achieving their objectives. At this stage, the devices are to be regarded as fully developed prototypes, whilst the relevant computer programs are completed.

Highlights of the individual elements are as follows:

1. Typed Input

This uses a stand alone commercially available CRT terminal, consisting of a golf-ball typewriter, dual magnetic-tape cassette system and electronics, of total cost about $10,000. This terminal uses the Selectric correspondence code, and permits duplication from tape to tape with or without printing, either section by section (99 sections per tape), line by line, or word by word. Up to 15 characters per line can be added to any line without the necessity for duplication, due to the spare blank tape available at the end of each line. Up to about 250,000 characters can be stored per cassette. The terminal can be extended by VDU terminal, high-speed printer and computer interface.

Other units of very similar performance are currently available and this component may be regarded as relatively routine.

2. Editing

Two systems have been developed. First, using a

conventional visual display unit, text can be manipulated in the fairly usual way. This is aimed at removing printers control characters on paper tape, resolving ambiguities (close single quotation marks/apostrophe for example), modifying the layout, or inserting braille (e.g. an arrow is inserted as five braille cells by typing 25, 25, 25, 25, 1235, each number group specifying the required dot positions of one cell). This is currently used with the in-house computing facilities for limited braille production using a modified IBM 1403 line printer.

A more interesting development is the braille terminal, described in the document "Textautomat fur Blindenshrift". This currently accepts data on paper tape or computer magnetic tape with output to paper tape. Using a special keyboard (numerals plus braille plus control characters) any line of braille is selected by page and line number and displayed in two ways, a visual output (using light-emitting diodes) and in tactile braille using very nice solenoid operated braille cells developed at Stuttgart. This display gives good quality tactile output at a moderate cost, currently about $31 per cell and expected to fall to about a quarter of this after a year. This cell is already used in 12 digit display units for the Texas range of calculators, the SR16 being demonstrated.

Lines can be manipulated in a fairly versatile way, though difficulties seem to arise when the new line exceeds the length available. It is intended that magnetic cassette input/output will be added, though this has not yet been achieved.

This seems a potentially useful device, the most serious limitation probably being its limitation of one line display at any one time. The braille output devices can be stacked, but an inter-line spacing of about one inch is required because of mechanical dimensions. No estimate of price could be offered.

3. Translation to Braille

It was interesting to learn that two distinct computer programs have been developed for tanslation of text to (German) grade II. A program aimed at book production, with an error rate of less than one per page runs about ten times faster than a more complex program designed to produce 'perfect' grade II, used currently primarily for research studies.

4. Output Device

Undoubtedly this plate embosser and the braille editing terminal proved to be the joint favourite items of attention for the delegates, and were focal points for informal discussions throughout the seminar. The embosser is designed to produce printing plates in zinc, tin or aluminium. It was seen operating from paper tape (using the MIT code) at a rate of ten characters per second. The machine is called a prototype, and I guess the midnight oil had been burning for a few weeks before the meeting, but on the days of the visit it appeared, and functioned, immaculately. The basic frame is that of the Marburg manual machine, seeming to give entirely satisfactory rigidity. The plates are mounted on a horizontal table, driven in two dimensions by stepping motors via flexible belts (these have glass fibre cores and negligible stretch). A fast response drive motor, with speed control, drives the punch via a cam system. The size of the braille cell is adjustable, since the stepping motors give a motion of 0.13mm per step and the number of steps for each braille cell (in horizontal and vertical direction) is preset from (internal) controls. A manual keyboard is available and working. This enables the position of the plates to be set (normally stepped from braille cell to cell) and any braille character typed in from a (six + space key) keyboard.

Some of the features which impressed the visitors are the obvious attention to good engineering design throughout, the wide use of proven commercial mechanical and electronic

components, and the high quality of the braille dots. The registration of two-sided braille seems to be entirely satisfactory and the whole unit is remarkably quiet in operation and quite compact. By varying the dot spacing, some simple diagrams can be produced. One truly remarkable feature to one familiar with the temperamental behaviour of prototype devices, was the nonchalance with which the system was frequently switched on and off with no detectable ill-effects.

Against this, the long-term reliability has not been proven. Due to recent commissioning only 40 sheets had been embossed by the day of the visit. The height of the dots was highly uniform, but individual dot heights cannot be adjusted. With current control electronics a missing carriage return (on the input tape or misread by the tape reader) wrecks the current plate, since it cannot be re-positioned correctly for further tape control. Only punched tape input has been implemented so far. In production, the plates must be inserted manually for two-sided braille, and of course paper tape reels must be changed more frequently than would magnetic tape reels.

The current status is that the Blindenstudienanstalt, Marburg, is to develop the machine, hoping to have the first half dozen available after about one year. Cost is a doubtful quantity, and the people from Marburg refused to comment on this. Very informal discussions suggest a lower figure of about $18,000.

5. Tactile Diagrams

Two interesting systems are offered, both working from high quality artwork, not using computers for a change. The first system uses a special deep etch process (Nylo print) for male and female plates to be used in a conventional press. The trick here is to use a simple special optical system, with a 1mm space between master and reproduction, so that the two sides fit together properly and can be used in a conventional printing press. The quality is, in my opinion, acceptable. Variable heights cannot be achieved.

The second method uses silk screen printing with special 'effervescent' ink. This ink, when baked, gives off a gas causing a uniform swelling and greatly increased height. A bit messy, but again probably highly acceptable subject again to the above comments on height limitation.

Overall, several most impressive techniques have been produced. It's a pity the systems have been so paper-tape oriented, but this is not particularly serious in the long term, and was decided originally in view of (a) most compositor's tapes in Germany are of this form, and (b) tapes are easily and cheaply read a character at a time, so no electronic buffer memory is needed. However, at the current time I don't think any new system should select this medium. Even at only ten characters per second, a unit will require a lot of tape and associated storage space when working to full scale production capacity.

It is apparent that the three-year project has identified the factors limiting the economic production of books in Germany. By combining existing devices with specially developed elements a viable system has been evolved. It is hoped that the complete system will be implemented in the near future, and that the individual component parts will be given due consideration when any organisation plans to expand production.

The seminar was extremely well conducted throughout, and our thanks are due to Dr. Kuppers and his colleagues for the excellent organisation of the technical sessions and for the highly entertaining social evening at the historic 'Red Ox' in the old quarter of Heidelberg. I gratefully acknowledge the partial support of the American Foundation for the Blind to aid my participation in this event.

A Guideline for the Improvement of Braille Production by Computer

P.R. Bagley

Here is my strong opinion on what must be done to make computer-produced braille cost-effective. It is borne out of more than three years of struggling with producing material for the Internal Revenue Service using a modification of the DOTSYS III translator.

The principal cost is in editorial work, to prepare the material for translation, and to proofread and correct the translated result. Compared to the cost of the editorial work, the actual computer charges are unimportant. Therefore, any approach which is intended only to reduce computer time will not be of much help.

The greatest saving will be made possible by eliminating the need to proofread the translated result for content (i.e. correctness of translation). You must be able to assume that, if the input is correct (for content), then the translated result will be also. There is no compromise possible - either you must be able to trust the translator 100 percent or you must proofread and correct the result. To be able to trust the translator means that you cannot have exception tables to take care of the translator's deficiencies. Otherwise, there will always be exceptions that were overlooked and which can be found only by proofreading the translation. Thus, the braille translation rules must be 100 percent programmable. The principal rules which stand in the way are those rules dependent on syllabication, on breathing, and on meaning. The contraction rules and the rules for letter signs are thus in for radical revision.

The second major area of editorial work is in formatting - which includes handling and positioning of headings, page numbers, footnotes, illustrations, etc. I do not believe it is humanly possible to avoid proofreading the translator output for format. It has not been possible, in my experience, to find all format errors by proofreading the

input to the translator. Hence, reducing the editorial effort involved with formatting can only be done by simplifying what has to be done. Main candidates for simplification are:

1. Simplify the rules for headings, so that the editor's work is limited to indicating what text constitutes a heading.

2. Move page numbers out of the text lines, so that when lines must be rearranged to accommodate corrections or changes, they do not have to be reset.

An additional minor improvement in cost reduction can be achieved if occasional typographical and format errors will be tolerated - at about the level committed by newspapers. It takes a tremendous effort to achieve a small improvement after the first proofreading and correction cycle.

Regarding my suggesting changes in the braille translation rules, I feel it not appropriate for me to do so. The criteria are very simple - the rules must be 100 percent programmable - but what the actual rules are does not matter to the programmer. But they matter very much to the reader (which I am not). The ultimate determination of a set of programmable rules can best be done by those who are braille readers who understand what "consistency" means - for the choice of rules is guided almost wholly by what is acceptable to the majority of braille readers.

Regarding changes to the format rules, however, I have suggestions based on what we have found to be tedious for editors - which braille readers are not in a position to judge.

The area of system design certainly has a major impact on production cost, but has nothing to do with braille rules. Naturally, I have very strong opinions on how computer-based

braille systems should be designed. I believe the system must make the editor's work as simple as possible: this implies on-line input, editing, and processing. Some of the system design details depend heavily on the translation and formatting rules, which have to be resolved first.

Braille Revision Study Project

We would like the opportunity to study systematically the revision of the braille rules to minimize the cost of producing braille by computer. The rule changes would involve both contraction rules and formatting rules.

The nature of the contraction rule changes would be principally the relaxation of restrictions on when contractions could be used, and the elimination of those conventions which saved only a tiny amount of space. Changes of conventions which require relearning (such as changing the meaning of a contraction or introducing a new one) would be done only in cases of extreme desirability.

Changes in format conventions would be principally to save space or editorial effort without reducing readability.

Word frequency and other studies would be made to measure the usefulness of proposed changes, and readaibility tests would be conducted with braille readers to determine acceptability, reading rates, and reading error rates.

The starting point for contraction rule changes would be G. Staack's A Study of Braille Code Revisions[1]. The starting point for format changes would be our own extensive experience in producing braille over the past three years, in which we have to a large extent followed the braille code for textbooks.

---

[1]Gerald Staack, M.I.T. Masters Thesis 1962.

The dimensions of the project could be tailored to fit the amount of money available. Modest trials could be made for as little as $5,000. An extensive study could cost as much as $125,000. We think a pilot project should be funded for $20,000-$25,000; at the end of this pilot there will be enough data to have a sound basis for determining what additional work should be done.

Partial List of Potential Areas for Change

Contractions	Dates
Letter signs	Page numbering
Indentation	Headings: position, level indication
Tables	Forms
Illustrations	Italics
Units of measure	Capitalization
Nested Parentheses	Splitting of text between volumes
Running heads	Footnotes

Duxbury Systems

Products and services

Duxbury Systems, Inc. is a pioneer in the application of minicomputer-based systems to braille translation and related text-processing tasks. Its principal product is the Duxbury Braille Translator, a software system that will translate English to formatted Standard English Braille (Grade II) at speeds in excess of 1,000 words per minute, when installed in a typical minicomputer, and at proportionately faster rates when installed in larger computers.

This software may be purchased or leased by itself; or Duxbury systems will be pleased to work with its customers in defining and acquiring entire systems including mainframe and peripheral hardware in addition to the Translator.

Duxbury Systems also offers translation services, working from any desired source medium (inkprint, compositor's tape) to any desired output medium (including finished braille in small quantities), and offers consultation services in connection with any aspect of braille automation, including questions of feasibility, user acceptability, cost, and phaseover planning.

Typical System Operation

In a typical application of the translator, text for one or more braille volumes is recorded and edited on a data file using standard typing procedures. The translator system, using this file as input, produces another data file containing the information necessary to drive an embossing terminal or stereograph. This output file can be edited, if desired, and may be reused as often as necessary for additional braille copies. The various data files will be physically represented on storage media such as magnetic tape cassettes or magnetic disks depending on the particular hardware configuration.

Pricing Information

The software system, including complete installation with test demonstrations, full documentation, and a one year maintenance warranty is priced at $22,000 when installed on any appropriate NOVA or ECLIPSE computer manufactured by the Data General Corporation. There is an additional conversion fee for installation on other types of hardware (a FORTRAN IV compiler and at least 64K bytes of core storage are required). Using Data General equipment a basic but complete system can be configured for under $40,000 including both hardware and software. A medium-to-high volume system may run to $60,000 or so.

Using Punched Cards for Automated Braille Embossing

N.C. Loeber

In 1967, the Lutheran Braille Workers, Inc. (LBW) began using a modified keypunch machine to produce braille master plates. Before introducing this equipment, LBW used volunteer operators working at one production location to make the master plates with large and heavy braille plate embossing machines. The size of the equipment necessitated centralisation of the work and limited the number of volunteers that could participate. Such a method restricted the number of plates that could be produced. The punched card braille system designed by the author enabled LBW to increase the number of its work centres and the variety and volume of braille material which it could distribute free of charge to anyone requesting it. For example, during 1974, LBW provided over 50 embossing centres with master plates for the production of over 3,000,000 sheets of braille paper that was bound into more than 35,000 volumes. Most of the master plates were produced using the punched card system. While more modern technology is now available, this simple technique of producing master plates with a modified keypunch is a possible solution for locations that do not have access to more elaborate equipment.

The punched card system used by LBW works in the following way:

Volunteers prepare punched cards using the transcribing card punch and an automated braille writer:

The volunteer reads from the printed text and uses a keyboard much like a conventional typewriter to punch the card. By pressing a single key, the machine automatically punches the hole(s) of the appropriate number and position in the card to represent the complete braille

configuration required.

The volunteer then puts the punched card into the machine again. This time, the machine reads the card and prints out the contents of the card in braille on a sheet of paper for proofing. The volunteer checks the accuracy and format of the braille embossed output and corrects the punched card if an error exists.

Volunteers send the complete and accurate punched cards to the central work centre:

Operators at the work centre place the punched cards in a card reading machine. This machine actuates the stereotype embossing machine that embosses dots on the master plate. By reversing the plate and shifting it slightly, the operator embosses on both sides of the plate.

Operators send the embossed master plates to other work centres for printing:

The printing work centres produce the braille embossed pages using the master plates and small roller presses. They then bind the pages and package and distribute the books.

This system has been successful for LBW because it is relatively inexpensive, provides for the use of many volunteer workers, and increases the number and variety of braille pages that can be printed.

KOBRL Numeric Code:
An Inkprint Ouput for Computer Transcribed Braille

K.O. Beatty

A common difficulty with computer transcription of braille is that production of embossed braille from the "transcription" requires expensive special output devices. Consequently, although there are hundreds of computer facilities with the potential for transcribing, most of them cannot produce an output usable by the blind.

The KOBRL* numeric code provides a computer output that may be directly used as the instructions for operating a Perkins Brailler, hand-slate or, other manual device to produce embossed braille. The simplicity of interpretation was clearly demonstrated by an eight year old girl who, with less than one minute of instruction, used a Perkins Brailler to produce standard English Braille by reading a computer print out in KOBRL numeric code. She had no prior knowledge of braille or the code and had never even seen a Perkins Brailler before.

The six data positions of the braille cell form two columns of three dots, like the six on a die or a domino. The usual practice is to number the positions from 1 to 3 starting at the top of the left column and from 4 to 6 starting from the top of the right column. In this system the dots used to form a specific symbol are designated by number. Description of the symbol thus requires as many numbers as there are dots in the symbol.

The KOBRL code is based on treating the six dot positions as a double octal system. The positions in the left column are designated as 10, 20 and 40 starting from the top. The KOBRL numeric code for any braille symbol is then the sum of the numeric values of the positions occupied by the dots in the symbol. This sum is always a two-digit number provided we use a zero to indicate that there are no dots in a given column. For example, the braille symbol

*Pronounced co-braille

for the word "for", which consists of all six dots, is 77 in the KOBRL code. The symbol for the word "the", which consists of the dots, 2,3, 4 and 6 in the usual braille numbering system, has a value of 65 in the KOBRL code.

To make the computer output easily read, our practice has been to use hyphens between the number pairs corresponding to the braille symbols forming a word. Spaces are left between words.

In the KOBRL code, the symbols for the alphabet are:
10-30-11-13-12-31-33-32-21-13-50-70-51-53-52-71-73-72-61-63-54-74-27-55-57-56

The sentence "I like to read." becomes

04-21 70 62-72-20-13-26

in Standard English Braille.

To produce embossed braille using a computer transcription output in KOBRL code is a simple matter. The six embossing keys on the brailler are labelled 40, 20, 10, 1, 2, and 4, respectively, starting from left to right. To produce the correct embossed symbol, the operator presses the combination of keys whose numbers total to the KOBRL code number. Since each combination of keys totals to a different number there is no possible ambiguity.

Embossing on a hand slate is only slightly more difficult. The dot positions values must be memorized since they are too small to label. Also, the column values must be inverted because it is written backwards on the hand slate. Thus the right hand column contains the 10, 20 and 40 and the left the 1, 2 and 4. The combinations are so simple, however, that they are very quickly learned by almost anyone*.

---

*It has been suggested that this is well within the capabilities of many retarded persons and that embossing braille from a numeric code instruction might be a useful and satisfying occupation for some of these people.

The KOBRL numeric code has been demonstrated or described to interested people from time to time. Almost invariably someone suggests that the computer output could be read optically with the signal from the optical reader used to actuate an electrical device to operate the brailler. When this was suggested recently in the presence of a blind computer programmer, he immediately pointed out that the majority of people come well equipped with two optical readers and did not need electrical input in order to operate a brailler. It is at this widely distributed source of optical readers available at every computer facility anywhere that this code is aimed. We believe that its use could be of significant value to the thousands of blind people scattered across this country and around the world.

A newly developed computer program to transcribe braille is described in another paper**. This SPITBOL program, capable of transcribing at a rate of 500 to 1000 words per second, outputs in the KOBRL numeric code, thus permitting conversion from inkprint to embossed braille by untrained persons using only widely available equipment.

**SPITBOL Transcription of Braille to KOBRL Numeric Code.

SNOBRL Transcription of Inkprint into KOBRL Numeric Code

K.O. Beatty

There are thousands of blind persons in this country whose need for brailled material is highly individualized. The blind college student, lawyer, insurance agent, social worker, housewife, computer programmer, automechanic, disk jockey, etc., each require brailled material appropriate to their immediate problems. The only way these needs are now met is by trained volunteers who have spent from four to six months learning braille. The number of volunteer braillists is quite limited and most of them are kept extremely busy transcribing material wanted by more than one person (e.g. novels). As a result, the individualized need can rarely be met promptly enough to be of any value in solving the blind person's day-to-day problem.

A program called SNOBRL has been written in the SPITBOL version of SNOBOL4 which transcribes inkprint at a rate of 500 to 1000 words per second into a numeric code called KOBRL. This numeric code, described in aother paper,[1] is easily interpretable as the instructions for operating a Perkins Brailler, hand slate, or other manual device to produce a good quality Standard English Braille version of the original inkprint. The input to the computer is the text to be transcribed. The only editing needed is to insert an asterisk or plus sign before letters which are capitalised.* Consequently any willing sighted person with five minutes instruction can, by use of this SPITBOL program, produce an embossed braille version of inkprint at a rate comparable to that of a trained braillist.

Braille is a 63-symbol dot code based on the presence of absence of dots in each of the six specified positions that form the basic braille cell. Individual braille

---

*Braille has no upper and lower case letters as such so capitalization is indicated by a special braille symbol immediately preceding a letter symbol.

symbols may stand for letters, letter combinations, whole words, punctuation, and special signs. There are also some two-symbol combinations which stand for groups of letters that in some cases also are whole words. Transcription into braille consists of substituting these braille symbols for the letters, letter combinations, words, punctuations and special signs of inkprint according to a rigid set of rules.[2] These rules specify the hierarchy of preference of alternative letter combinations and place restrictions on when they may be used at all.

It is not an easy matter to write a transcription program that is completely rigorous with regard to all the rules in every situation. The SNOBRL program avoids some of this difficulty by including as initial data the KOBRL numeric code for the correct transcription of several hundred words. The codes are associated with the words they represent by being assigned as the values of the respective words. An important key to the success of the program is that it provides for addition to this vocabulary on a selective basis as the need is demonstrated. In this way it is possible to approach a completely correct transcription as closely as desired.

The program is written in the SPITBOL version of SNOBOL4, a string manipulation language, which has operations for forming and separating strings, testing their contents, and making replacements for them. These are precisely the functions involved in transcribing. The text to be transcribed is separated into tokens one at a time. A token is defined as any group of symbols bounded by blanks. Using the indirect reference capacity inherent in SNOBOL, tokens are replaced by their values (i.e. their KOBRL numeric code equivalents) if these tokens and their values have been entered in the vocabulary.

If there is no non-null value for the token, its content is tested and it is broken into substrings whose values are non-null. The token is then replaced with the sequential concatenation of the values of the sub-strings. This is

ultimately always possible by using the individual symbols of the token as the substrings since values for every such symbol have been included in the vocabulary.

Selection of a strategy for breaking the token into sub-strings is the essence of the programming problem. This strategy, together with judicious selection of the vocabulary to be included, determines the speed and correctness of the transcription. A detailed description of the program, which contains about 125 non-I/O statements, is beyond the scope of this paper, but the general approach is worth outlining.

With the few exceptions discussed later, the vocabulary consists of individual symbols and whole words. Consequently a token which contains numbers, punctuation, or capital signs will not be recognised even though these are appended to a word which is in the vocabulary. Since in braille numbers require special treatment, an unrecognised token is first checked to see whether it contains any numbers. If it does the token is sent to a special subroutine for transcription.

Nonnumeric, unrecognised tokens are first broken down into three substrings consisting of any nonalphabetic prefixed symbols, any alphabetic string, and any nonalphabetic suffixed symbols. Any one or two of these substrings, of course, may turn out to be null. The symbols in each of the nonalphabetic substrings are then replaced symbol by symbol with their KOBRL values. If the word is not in the vocabulary, it is replaced letter by letter with the corresponding KOBRL numeric values. The three replacement strings are now concatenated and form the value or "transcription" of the original token.

In the event that the token does not contain as a substring a word that is in the initial vocabulary, the token is tagged and put into a new word list along with its value. Each time that same token appears it is counted and replaced with its value. Along with the final transcript, the output

lists each of these new tokens and their frequency of appearance. As presently programmed, no count is kept of the frequency of appearance of words in the initial vocabulary, but this could be easily added.

As mentioned above, the initial vocabulary consists basically of individual symbols and whole words. Presently, we also include the words 'the' and 'i' preceded by the capital sign. So many sentences start with 'The' that this does save some time in transcription. We have also included a few suffixes, viz., -ed, -er, and -ing (each of these suffixes has a special symbol in braille), and any unrecognised alphabetic substrings of tokens are checked for these suffixes before resorting to letter by letter transcription. The root word is checked against the vocabulary if a suffix is found. If the root word is not known (actually, the root plus 'e' is also checked) the root is transcribed letter by letter and the KOBRL value of the suffix is concatenated to it.

Correct braille must conform to the rules previously mentioned. It is obvious that the transcription produced by the program described above will consist of some completely correct braille, viz., those words which were in the original vocabulary and those words which are correctly spelled letter by letter. It will also contain some letter by letter transcriptions for words whose correct transcriptions would include one or more letter combination symbols. While such a transcription is readable by a blind person, it may slow down the reader if there are too many words not transcribed in Standard English Braille (American Version).

One way to avoid this problem while still using a vocabulary look-up approach is to have the vocabulary contain all the text words that require other than letter by letter transcription. To approach this on a general basis would require a vocabulary of tens of thousands of words. Yet, it may be resolved on a specialised basis with a fairly limited basic vocabulary.

Studies such as those by Kucera and Francis[4] have shown that there are about 150 words which make up 50 percent of the word-tokens in almost any reasonable length sample of current American English writing. A vocabulary of 1000 words, however, will account for only another 10 or 15% of the word-tokens. It is apparent that a general vocabulary to anticipate all the possible words, even a 5000 or 10000 word sample, might have to be longer than the sample itself.

What has been done in the SNOBRL program is to use an initial vocabulary list of only a few hundred words. This includes all of the 185 short form words of braille plus other words from the high frequency end of the Kucera and Francis tabulation. A 500 to 1000 word portion of the material to be transcribed is run through the computer. As mentioned, the output lists all words that were transcribed letter by letter and how often each appeared. The words in this list together with their correct KOBRL values are now added to the vocabulary and a larger portion of the text is put through the computer transcription process. Transcription and vocabulary enlargement may be repeated as often as desired. When the number of letter by letter words in the output is satisfactorily small, the transcription is considered complete and embossing is carried out.

References

1. KOBRL NUMERIC CODE: An Inkprint Output for Computer Transcribed Braille by K.O. Beatty. Braille Automation Newsletter, this issue.

2. English Braille, American Edition 1959, Revised 1972, American Printing House for the Blind, Louisville, Kentucky, 1972.

3. Ibid. pages 26-30.

4. Computational Analysis of Present-Day American English by Henry Kucera and W. Nelson Francis, Brown University Press, Providence, Rhode Island, 1967.

SAMBA and RUMBA: Systems for Computer Assisted Translation of Braille Music

W. Watkins and J. Siems

Introduction

In May, 1971, the American Printing House for the Blind (APH) undertook a project, in cooperation with the Library of Congress, Division for the Blind and Physically Handicapped, to develop a system for computer assisted translation of braille music. To date, progress has been made toward the implementation of two systems for this purpose - SAMBA (Systems Activated for Music Braille Automation), and RUMBA (Representations Utilizing Music Braille Alphamerics).

SAMBA

Input

In collaboration with Music Print Corporation of Boulder, Colorado, APH has developed a music typewriter-to-card punch, capable of encoding standard music notation of virtually any complexity. In addition to alphanumerics, the type font contains 38 music graphics which can be used singly, or can be superimposed, to produce computer-identifiable symbols. Forward and backspacing generates codes, as does movement up or down the music staff. In this way, a two-dimensional array is represented by a succession of punched codes and a typed copy of the music text is produced for subsequent proofreading.

Porgramming

The translation programs written for the SAMBA system are, at present, limited to translation of relatively simple single-staff monophonic music with a significant amount of human intervention. The programs, written in assembler

language, are sizable, requiring some 350,000 bytes of storage (including the APH literary braille translation programs) and require five runs on an IBM 7040 computer.

Auxiliary Programs

Several programs have been written for peripheral operations. One of these is a program to display music input on the printer. Music typewriter graphics not available on the printer are represented by two-letter symbols. This two-dimensional display may be compared with the inkprint copy to determine whether or not a section of music text has been correctly entered into the computer.

Output

The automatic stereograph machines developed at APH for literary translation are usable for music braille, as the same cell configuration and page format are common to both codes. From computer-prepared instructions, these machines emboss metal plates which are subsequently used in conjunction with presses to produce multiple paper copies.

Discussion

The high degree of complexity of music notation in general, and the braille music code in particular, which ramify in computer factors such as lengthy run times and high volume internal storage requirements, render inconclusive the possibilities for the practical application of a highly automated system for the production of braille music - further research is indicated.

Input

The first step in the operation of RUMBA consists of the conversion of music into the RUMBA language, which consists of alphameric equivalents of braille music signs, by an input specialist of whom a thorough knowledge of the braille music code is required as well as certain fundamentals of Grade I literary braille. Because most titles, credits, and literary footnotes are translated into grade II braille, it is usually necessary to have them translated prior to the encoding step in order for the input specialist to maintain an accurate cell count on the braille line.

The input specialist indicates the RUMBA language on coding sheets consisting of rank and file numbered blocks corresponding to the cells on a braille page; this allows for an accurate line and page count to be maintained.

After completion by the input specialist, the coding sheets are keypunched into cards or magnetic disks.

Processing

If the music to be processed is vocal music (and therefore contains lyrics), it requires extra initial processing to edit the lyrics and thereby prepare the data for the basic music translation programs, RUMBA 1 and RUMBA 2. If the data contains no lyrics, the file goes directly to RUMBA 1.

Programming

The programs for RUMBA, written in assembler language, have as their function the implementation of the language used by the input specialists. In its present form the RUMBA system requires two runs to transform the coding sheet terminology into braille symbols. The first run analyses the data for indications of the various modes and recognises the material as musical or literary, page text or footnote,

parenthetic or non-parenthetic, etc. It then edits for translation. The second run converts the music symbols to the appropriate signs of the braille music code and translates literary material to grade I or grade II braille.

For the second run the APH Braille translation program is required along with an additional RUMBA program. The latter effects the recently adopted music format feature of placing the inkprint page number in the upper left corner of the braille page and also handles certain aspects of spacing which are characteristic of music.

A table of signs used in RUMBA processing is contained in a file of cards. The file is arranged in logical sections with headings. At the beginning of the first run the table file is read. The headings are ignored; and the entries are sorted for look-up.

In order to accommodate vocal lyrics, a program was written which makes modifications before the data is read by the other RUMBA programs. Music text containing lyric lines is read by the edit program and changed as necessary so that the repeat signs and words containing "in" will be processed correctly by later programs. The RUMBA lyrics program recognises the input symbols which distinguish both from the mnemonic code. Provision is also made for preserving the applicable status as the data alternates between page and footnote material.

The RUMBA programs, including the lyrics and literary braille translation programs, require approximately 200,000 bytes of storage.

Output

Automatic stereograph machines are utilised in both the RUMBA and SAMBA systems.

Discussion

The RUMBA System is complete, is in production, and is not limited in the types and complexities of braille music it can produce. Training of input specialists requires approximately eight weeks, based upon a 40 hour week, which contrasts with the two-to-three year apprenticeship usually necessary for a manual transcriber. While less convenient to use than the SAMBA input system, it is a viable alternative to the manual process of producing metal plates at a stereograph machine, and it does not require an in-depth knowledge of grade II literary braille.

Computers and Music Braille

P. Howard Patrick and Rosalind E. Patrick*

Abstract

The first part of the paper is a comparison between three systems for the computer-assisted translation of braille music: the SAMBA (Systems Activated for Music Braille Automation) and RUMBA (Representations Utilizing Music Braille Alphamerics) systems developed by the American Printing House for the Blind, and an adaptation of the IML-MIR (Intermediary Musical Language - Music Information Retrieval) system. The second part of the paper offers suggestions for the future development of systems for both the computer-assisted translation of braille music and the computer-assisted instruction of braille music.

The Present

Computer-Assisted Translation of Braille Music

At least three prototype systems for the computer-assisted translation of music braille have been developed and described in the literature: two systems, SAMBA (Systems Activated for Music Braille Automation) and RUMBA (Representations Utilizing Music Braille Alphamerics), have been developed at the American Printing House (APH) for the Blind (1) a third, developed by one of the authors of this paper is an adaptation of the IML-MIR (Intermediary Musical Language - Music Information Retrieval) system which was originally designed for computer-assisted analysis

---

* P. Howard Patrick is an Assistant Professor in Music at The American University, Washington, D.C.

Rosalind E. Patrick is a Special Education Teacher in Montgomery County Public Schools, Maryland.

of music (2). Table I and Table II contain a comparison of the Input, Translation, and Output features of these systems.

Table I: Input System

IML-MIR SYSTEM	APH SYSTEMS
Input	
IML is a one-dimensional horizontal alphanumeric language very similar in syntactic construction to music braille. Limited to music which can be reduced to one line per staff i.e. vocal music (monophonic and polyphonic), band parts.	SAMBA: no language. The operator tries to represent (in a two-dimensional format) the printed page. (The necessity of a two-dimensional input format is open to debate.) RUMBA: language uses alphamerics representing braille cells.
Hardware	
Can be prepared directly on: 1. a keypunch 2. teletype console 3. CRT console	SAMBA: requires a music typewriter which is not generally available; possible source of production "bottleneck." RUMBA: can be prepared as in the IML-MIR system.
Training	
Language takes about ¼ hour to learn.	SAMBA: No information available. RUMBA: thorough knowledge of the braille music code, and fundamentals of Grade I literary braille.
Coding	
Average page of music takes about 20 minutes.	SAMBA and RUMBA: no information available.
Problems	
Proofreading and editing.	SAMBA and RUMBA: proofreading and editing.

Table II: Translation and Output Systems

IML-MIR SYSTEM	APH SYSTEMS
Language	
All in FORTRAN	SAMBA and RUMBA: all in ASSEMBLER.
Programs	
Two passes - 1. IML translation program 2. MIR-Braille retrieval-translation program	SAMBA: five passes - 1. Input deck to music characters 2. Music characters to music units 3. Music units to edited music units 4. Edited music units to braille sign names 5. Braille sign names to braille RUMBA: two passes - 1. Analyse data for indications of various modes, and recognises the material as musical or literary, page text or footnote, etc. 2. Converts music and literary symbols to braille code.
Storage	
400,000 bytes	SAMBA: 350,000 bytes RUMBA: 200,000 bytes
Run-time	
Sample data of Kyrie 1 of Missa L'homme Arme by Josquin: IML translation = 10 secs MIR-Braille program = 28 secs (durations are CPU time).	SAMBA and RUMBA: no information available.
Output	
9-track computer digital tape which can be used as input to a braille embosser, e.g. LED 120.	Automatic stereographic machine

The RUMBA system is not really a computer-assisted translation system since the translation is done by the operator when preparing the input - it is therefore a "computer-assisted printing system" for music braille. The principal limitation of the SAMBA system is the input which uses a specially designed music typewriter. This restricts the widespread use of the system since few establishments can afford the expense of such equipment. The commitment by APH in 1971 to develop and refine such a typewriter is understandable. Their progress reports indicate the general opinion of authorities in this field was not favourable toward using a keypunch language. Despite several years of research and development, no system using a keypunch language input was fully operational at that time. However, since then, the situation has changed considerably. In the summer of 1972, after some 10 years of development, the IML-MIR system using keypunch input became fully operational. The five separate programs of the SAMBA system seem cumbersome and inefficient. Furthermore, they are all written in ASSEMBLER and this restricts their portability.

At present the IML-MIR system is limited by the IML language which cannot accommodate keyboard music. Since the MIR system is not dependent on the input language in IML, however, any form of coded music could be used as a data source. The present IML-MIR system can serve as the basis for the development of a more comprehensive computer-assisted translation system for braille music. It is true we are limited to vocal music, but it may be preferable to refine the system using this type of music before attempting more complex music and solving the programming problems that will undoubtedly arise on "easier" text.

It is apparent from the above comparisons that no one of these systems is a panacea for computer-assisted braille music translation; further research and development is needed.

The Future

Computer-Assisted Translation of Braille Music

Obtaining the money required for development of computer-assisted music translation systems is a major problem, and it would seem advantageous for translation to be achieved by adapting a system which is not dependent on the limited market of blind users for its major source of revenue. Compositors' tapes for inkprint editions can be modified for braille production in literary braille (3).

For literary braille it can be argued that investment is needed in this area to keep pace with the information explosion. This is not the case with music: no new music will be written by Bach, Beethoven, and Brahms! Unlike literary braille, music braille is an international language, and its market is not restricted by the language of the country in which it is used. The world-wide nature of the music braille market cannot be overemphasised, and it is more than adequate reason for some form of international funding.

The principal system for the computer-assisted printing of music, still being developed by Stefan Bauer-Mengelberg and his colleagues, is DARMS (Digital Alternate Representation of Music Symbols, also known as the Ford-Columbia language) (4). Obviously when this system is fully operational it should be adapted to print braille music, and thus provide a possible source of braille music editions of new music. But what about the vast body of music already in inkprint and for which new editions are unlikely?

Music already in print is being coded into some form of machine-readable code for research purposes, i.e., the computer-assisted analysis of music. Researchers at Princeton University have coded 20 Masses of Josquin Desprez in IML, Leeman Perkins of the University of Texas at Austin is coding the music of Ockeghem, and Prof. David Crawford

of the University of Michigan is coding Josquin Motets. Other researchers have coded music in various languages (many of them derived from DARMS). Researchers agree that the most difficult problem is the coding and proofreading of the material. Once the music is coded, no matter what the language, it is not a major task to write a program to translate the old data and reformat it into a standard code.

The user of the computer in music scholarship is limited at present, but its use is expanding. The availability of music for the blind is similarly limited, and the need is continuously expanding, but the relatively limited market for braille music severely hampers production of material. These two areas (i.e. computer-coded music and braille music) allied can benefit mutually both sighted and blind musicians.

Computer-Assisted Instruction (CAI) of Braille Music

Another area which can and should be developed, since all the necessary hardware exists, and the financial resources needed are not as large as that for the computer-assisted translation of braille music, is the computer-assisted instruction of braille music.

For the blind person, participating in a musical experience as a listener, performer, or educator, is often hindered by an inability to read music braille. Music braille is derived from literary braille, and the latter has to be learned first. The extra time required to learn music braille, and the limited number of people qualified to teach music, means that the number of people available to teach music braille is small.

The Education for All Handicapped Children Act of 1975 (PL 94-142) states that school districts must now provide all educational services for the handicapped. The use of

computers for the instruction of braille music is a possible avenue to compensate for the small numbers of qualified teachers of braille music.

CAI in education has been increasing slowly over the last decade, although not as quickly as many people expected. This slow growth is due to many reasons among them lack of instructional programs, lack of documentation, lack of texts, financial cutbacks, and poor distribution networks of material (5). Yet the concept of CAI is still valid. CAI allows students to develop at their own rates, frees teachers to deal with students' individual problems, and provides an added avenue of individual intellectual development.

The use of CAI in music has been limited. Many of the concepts of music are ill-defined and difficult as yet to organize in a computer program. Because of the small number of students in music, CAI is not very cost-effective. The representation of music using normal keyboard characters is also difficult; many projects have used instead cathode ray tubes displays with light pens. Finally, it is an advantage for a student to hear the music as well as read it. This last problem has now been overcome by computer-driven sound-generating devices which can be attached to a Teletype. The sound is limited to a square-wave signal, but most pitches are available (6). The recent organisation of the National Consortium for Computer-Based Musical Instruction (NCCBMI) should promote more active development in this area (7).

CAI for the blind has only recently become feasible with the development of braille Teletypes such as MIT's Braillemboss (8), and the Triformation Systems LED 120 (9). An early attempt at CAI in mathematics was felt to be successful (10).

Many of the previously mentioned problems will not be at issue for the computer-assisted instruction of music braille. Regarding distribution networks, the Division for the Blind and Physically Handicapped for the Library of Congress

already distributes educational material and talking books through developed and widely publicised channels. These channels can also be utilised to distribute documentation and copies of any CAI programs.

The problem of trying to represent graphic musical symbols is nonexistent, since all symbols are represented in embossed braille cells. The problem of translating ill-defined and abstract concepts of music into the form of a computer program is also not relevant, because the program will only attempt to assist in the instruction of the language of music braille (not music), and this language is already defined in the primers (11). The CAI program would provide additional drill material using an interactive capability.

Thus the use of CAI for music braille is not only feasible, but highly desirable. It provides immediately an additional instructional tool in an area of limited numbers of qualified personnel, and requires no new technical developments. Enhanced instruction in this area should increase the number of people able to read music braille, and thus help to create a greater demand for music published in braille.

Summary

More and more information is now being processed into machine-readable code. The translation of such codes into braille can be done efficiently and simply with the aid of the computer. The design special input languages and systems specifically for the blind is unnecessary and expensive. The blind and music scholarship are two Cinderella areas of public and private support; and research and development in the use of the computer in associated fields will always be hampered by fiscal restraint. It can only be to their mutual benefit if areas of joint concern are researched and solved simultaneously.

Footnotes

(1) American Printing House for the Blind. "Computer-assisted Translation of Braille Music", Progress Reports: May 10, 1971 - May 9, 1972, June 28, 1972 - June 27, 1973, september 1974 - November 1974, December 1974 - February 1975, March 1975 - May 1975, June 1975 - August 1975, Louisville, Kentucky.

(2) P. Howard Patrick and Patricia Friedman. "Computer Printing of Braille Music using the IML-MIR System", Computers and the Humanities, Vol. 9 (May 1975): 115-121.

(3) J. Grootenhuis. "Automated Braille Production from Compositor's Tapes", Dutch Library for the Blind, Undated.

(4) Stefan Bauer-Mengelberg. "The Ford-Columbia Input Language", Musicology and the Computer, ed. Barry S. Brook, New York: City University of New York Press (1970) 48-52.

(5) Hunter, Kastner, Rubin and Seidel, Learning Alternatives in U.S. Education: Where Student and Computer Meet. Educational Technology Publications, Englewood Cliffs, 1974.

(6) Fred T. Hofstetter, "Introduction to GUIDO, an Interactive Computer-based System for Improvement of Instruction of Ear-training," Music Department, University of Delaware, May 1975.

(7) Fred Hofstetter, "Foundation, Organisation, and Purpose of the National Consortium of Computer-Based Musical Instruction", Department of Music, University of Delaware, March 1976.

(8) George F. Dalrymple, "The Braille Computer Terminal: Applications in Employment," The New Outlook, Vol. 69 (January 1975): 1-6.

(9) R.J. Snipas. "Triformation Systems' Automatic Braille Translation Support Equipment", Braille Automation Newsletter (February 1976): 9-10.

(10) R. Evans and K. Simpkins. "Computer-Assisted Instruction for the Blind," Education of the Visually Handicapped, Vol. 4 (October 1972): 83-85.

(11) Edward W. Jenkins. Primer of Braille Music 1960 (with 1971 Addenda), American Printing House for the Blind, Louisville, Kentucky 1971.
H.V. Spanner. Lessons in Braille Music, American Printing House for the Blind, Louisville, Kentucky 1961.

Computer Coding of Music Scores Using An On-Line Organ Keyboard

S.G. Gillies and S.J. Goldsack

Much of the research work carried out so far in the field of music allied to computing has been concerned with analysis of existing musical compositions in order to study the technique of certain composers. Other work has involved the automatic composition of music by computer, and there are techniques for the generation of computer-plotted staff notation scores.

All this work has in common the need for a written representation of musical notation that can be understood both by the user and the computer. A number of languages have been designed over the last few years for this purpose. Some of these have been developed for particular purposes and projects, but a small number are suitable for encoding any piece of music. Once such a language has been chosen, there remains the considerable problem of translating the staff notation into this language.

Work is in hand at Imperial College (London, England) to automatically produce a coded form of a music passage played into a computer via an on-line electronic organ keyboard. The objectives of this work are to develop a system for generating tapes to be printed on a braille printer, or to drive a package to draw staff notations on a plotter.

The information describing a piece of music falls roughly into two categories. We decided to use an approach whereby information which is almost naturally presented as English text is input using a teleprinter, while information concerning note pitches and times is presented by automatic analysis of key depression on the organ keyboard. In this way we avoid the difficulties of representation of the notes using a teleprinter and also avoid difficulties of musical analysis which are inherent in a full analysis of the keyboard during performance of the music as written. For example, we have not attempted to play right and left

hands simultaneously: this seems to cause unnecessary scrambling of information which is very difficult to unscramble in the computer.

The long term objectives include the coding of orchestral scores with many staves, different clefs and sometimes two or more voices per staff (as, say, in a Bach fugue).

We have therefore developed a bar editor which will enable the user to build up, within the computer store, a data structure to contain the passage he is to play. He specifies, via the teleprinter, the fixed parameters of the passage - e.g. title, composer, key and time signatures, number of staves, clefs, voices, etc. He can then play on the keyboard any pre-selected part of the piece he chooses, so filling the empty structure with real notes.

Errors are corrected by replaying earlier passages where necessary. Listing of parts of the data structure may be made on the computer console, to assist with checking. When the user is satisfied that the piece is complete and correct he can request the computer to produce the output in coded representation on a tape for subsequent input to an analysis program, a plotting program, or a braille encoder.

Our hardware uses a standard 4-octave organ keyboard with a CAMAC interface to a GEC 4080 computer. The keys are scanned 50 times/sec by software which reads the current value of the state of the keyboard and compares it with the previous state to discover which keys have been moved. After a contact-bounce threshold has been passed, each state change either generates a new note-record or completes an old one, generated by an earlier key depression.

Timing is obtained from the real-time clock in the GEC 4080, and synchronism with the keying of the music is obtained by generating a metronome output. The performer selects his desired playing speed, and the real time analysis software relates note lengths and start times to the bar lines determined by reference to the metronome.

We have not yet made a final decision regarding the external language to be used. It is likely, however, to be one of those already available, quite possibly the Ford-Columbia representation designed by Stefan Bauer-Mengelberg. This has a one to one relation with standard staff notation and appears to be the most widely used by other researchers.

A plotting package to draw scores in staff notation has been developed, designed to draw music symbols in the traditional style suitable for printing. All the normal musical characters are available. The package is designed to run on a CDC 6600 computer, using a "Kingmatic" flat-bed plotter and it is intended that it should accept as input a tape produced by the bar editor.

This work is still at an early stage. The bar editor is not yet fully operational. Certain problems are anticipated with the fine tuning of the program that interprets the notes played. A very high standard of playing may be necessary to ensure that the correct note values are read. It may, for example, be necessary to play passages with many short notes at a reduced metronome speed. We are confident, however, that we have a cheap but effective technique that can lead to rapid transcription of music from conventional staff notation into standard braille notation.

Translating DARMS into Musical Braille

B. McLean

DARMS is a language for representing musical scores to a system of score-printing computer programs. Its name is the acronym for "Digital Alternate Representation of Musical Scores." A system analogous to the one for score-printing but which automates the production of braille keyboard scores using DARMS input data sets is now being developed. Preliminary problems in the formalisation of the DARMS-to-braille translation system are discussed here.

The highly mnemonic DARMS language, with its extensive abbreviation facilities, is much easier to learn, use, and proofread than braille. The encoding of scores into DARMS, rather than directly into braille, with a computer program performing the translation of DARMS into braille, would hasten the development of a large library of braille scores considerably. The resulting scores would have to be of the same quality as those prepared by encoders using braille directly. The idea is to spare encoders any unnecessary expenditure of time in the preparation of braille scores, but naturally not at the expense of braille readers who want to have the abbreviation facilities of the braille language used in scores. Is a general translation of DARMS into braille computable which would be not only correct but also sophisticated in using the full power of braille?

An abbreviated braille score is computable from a DARMS score in principle because DARMS contains all the information that braille does and more. DARMS represents what an optical scanner would detect on pages of a score, viz., exactly the visible symbol shapes at locations on a background. A DARMS score is a complete, unprocessed set of descriptors which describes the graphic image of a printed score, and for all computational purposes it is the actual score. A braille encoding of a score, however, selects, sensibly, essential musical meanings from the printed score and ignores some of the purely graphical

information; for example, stem directions are not encoded. Information is lost in a translation from a score into braille and there is a loss of information in a translation from DARMS to braille, but a DARMS-braille translator would be impossible to construct if there were more information contained in a braille score than in a DARMS score.

Musical braille has facilities for abbreviating certain constant features of a score, just as literary braille is in large part a system for contracting frequently encountered letter groups. For example, repeated chords and measures may be encoded only once and then be referenced upon subsequent appearance. DARMS has such abbreviation facilities and many more which may be translated into the braille abbreviations. DARMS encoders who also know braille could insert control information into a DARMS score to specify exactly which abbreviations are intended in braille. A sophisticated translator is therefore at least conceivable because the input language contains all the information needed to compute an abbreviated braille result.

Practical problems are the specification of the syntax of musical braille and the specification of the semantics of DARMS expressions in terms of associating with them their braille counterparts. A syntactically correct sequence of braille characters can be semantically correct only if the rules for the layout of characters on a page of braille score are obeyed. For example, certain abbreviated braille codes, e.g., the repeated measure code, may not begin a new parallel (the braille equivalent of the printed score "system"), but must be spelled out in full. There are many other layout-contextual restrictions in braille and therefore translation is not a straightforward symbol-for-symbol mapping from DARMS into braille. For any DARMS expression there will not be associated a unique sequence of braille characters, but rather a set of alternatives from which one sequence will be chosen depending upon layout and other conditions.

A construct recently formalised in metalanguage and compiler design theory is perfectly suited to specify the syntax and semantics of the translation, incorporating such condition-setting information as layout rules *(1)*. The construct is the attributed translation grammar which consists of the specification of (1) the syntax of the source language (DARMS) in a metalanguage such as BNF or TBNF *(2, 3)*; (2) the semantic actions associated with each production of the syntactic description of the source language; and (3) the attributes of phrases, syntactic variables, and semantic actions which must be consulted to ensure semantic well-formedness of the object language (braille). Attributes such as current page, parallel, line and cell placement and keyboard format type (bar-over-bar, line-by-line, section-by-section, or open-score) are explicitly defined as variables in the grammar and given values during the translation. The attributed translation grammar is a comprehensive, concise, and pragmatic way of defining all data structures and their real-time interactions during translation.

References

(1) Lewis, P.M., II; Rosenkrantz, D.J.; and Stearns, R.E. Compiler Design Theory, Reading, Mass., Addison Wesley, 1976.

(2) Doncette, D.R. A Comparative Study of Parsing Techniques, Ph.D. Dissertation, Polytechnic Institute of New York, 1974.

(3) Lawson, H.W., Jr. and Doucette, D.R. A Translation Machine with Automated Top-Down Parsing, ACM SIGPLAN Notices, Vol. 11, No. 2, 20-29, Feb. 1976.

Computer-Assisted Transcription of Braille Music

Sally Wilkinson

The feasibility of using a teletype linked to a computer to transcribe keyboard music into braille formed part of an M.Sc. course for the writer whose mother-in-law has been manually transcribing music for upwards of 60 years. All technical support was given by Mrs. Wilkinson, Senior, since her daughter-in-law knew little music and no braille at the start, in the autumn of 1974. The aim was to develop a simple method of input for the music to the computer and to set up files which could be used to set up the braille either on or off line. By mid-summer 1975 a system had been produced which was capable of setting up any number of lines of music, the capacity of a braille page being the only limitation. Music of considerable complexity could be transcribed by a knowledgeable braillist and the system was sufficiently simple to allow unskilled operators to use it successfully after about an hour's practice.

The method of input was based on that used at the R.N.I.B. where a sighted reader dictates the music to a blind operator. To do this the teletype keyboard was defined as having three modes of operation. The prime mode was music mode. Keys were given musical interpretation in what seemed the most logical manner. For example, the notes A-G were the letters A-G and the octave signs were the shifted values of the corresponding numbers, so that fifth octave was the % sign. Rest was allocated the key R and treated as a note for input. Time values were input by the right hand immediately following the note to which they applied; they were paired so that the shifted value of the key was the associated time value in braille, i.e. / indicated the semibreve and its shifted value ? a 1/16. The intervals were allocated to adjacent keys as far as was practicable to aid the user. Accidentals, similarly, were grouped and associated keys were used for the opening and closing of long slurs. The keyboard also offered direct access for the user to short slurs and staccato. The numerals were given their

face value for use as fingering and also for the input of time signature etc. Music mode had two keys reserved to enable it to call the other two modes, literature mode and braille mode.

Literature mode enabled the user to input directly all braille cells which share the same print equivalent in both Grade II braille and Braille Computer Code (B.C.C.). This is only about 36 of the 64 combinations since the numerals in B.C.C. have a unique representation and do not require a number sign to precede them as in Grade II braille. When the keyboard was in literature mode the system preceded all input with the appropriate cell and terminated it, automatically, with a dot 3. One key in literature mode was reserved to recall the system to music mode.

Braille mode could be similarly called from music mode and also had a key (the *, as in literature mode, which is infrequently used in braille music) to enable the user to return to music mode. In braille mode the user had direct access to any braille cell since they keys each had the B.C.C. equivalent of their face value. Using braille mode a skilled braillist could set up all combinations of cells not catered for in music mode thus enabling any music to be transcribed by the system.

The computer used was the DEC system 10 at Hatfield Polytechnic. The preliminary work was done in Extended BASIC but the system was finally written in Extended ALGOL 60. This prototype program used about 8K of core. The main requirement for the language is that it should offer excellent string handling and, preferably, be readily readable. The demands of the transcription process were such as to extend the compiler to its limits.

The requirements for the transcription of music into braille split conveniently into two disparate parts. On the one hand there is the need to carry out all the protocols for the disposition of the score and on the other the

setting up of the music itself. With regard to the disposition of the score the system successfully carried out the following automatically:

(i) dealing with pieces starting with an incomplete first bar

(ii) setting up the bar number in the first line of every parallel

(iii) setting up the ink-print parallel in the second line of the parallel as required by the layout of the ink-print

(iv) adjusting all lines to align the line distinguishing cells such as right hand and left hand

(v) examining the first cell in each line of the first bar of a braille parallel and inserting dot 3's when required

(vi) ending the piece with the braille equivalent of the double bar line and, finally, centring the end of piece signal on the following line. Elaborations of the double bar line, such as repeats, were not catered for, neither was the system capable of starting a new braille parallel after a double bar line in the middle of a piece.

The music content was examined a line of a bar at a time. The program carried out exhaustive checks to establish the validity of the input presented and elementary editing facilities were offered. For example, if a note was not followed immediately by its time value a message was output asking for the time value to be input before the analysis of the bar continued. Illogical input, such as an accidental following an octave sign, was drawn to the user's attention and the offending input could be replaced, omitted or an insertion made. Any input which had already been accepted was not accessible at that stage. However, at the

end of each bar line the user was given the option to reject the bar as set up and thus errors could be corrected by the input of the bar for a second time. A count of the beats in each bar was kept and at the end of a bar line any discrepancy was printed to indicate error and aid the user in finding it. Once a bar line was accepted there was no means of editing it further.

Provided no bar required more than 30 braille cells for its representation the system was capable of setting up the music correctly. Since the analysis was line by line no account could be taken of introducing the music hyphen, thus the system could not set up music containing over-length bars. A revised system could overcome this by carrying out the analysis bar by bar and indicating to the user if a line was overlength. The writer is convinced that it would be possible for the user to indicate an acceptable beat on which to break the bar and for a more elaborate system to set up the music hyphen, helped only by the user supplying the necessary octave signs for the start of the continuing bar. The writer feels that for the system to establish the octave sign automatically would involved very sophisticated coding techniques bearing in mind the complexity of the rules governing octave signs. For that reason the system required the user to supply octave signs at the start of all bars (not a requirement at present in the U.K.), since the system automatically sets up braille parallels as required without user intervention.

The prototype system suggests a method of setting up music in braille using limited equipment. The writer invited three sighted musicians and a blind musician to try it and found that after about an hour's tuition all could get results, those with a good knowledge of braille music finding adaptation easy even though they had no previous experience with a teletype. This implies that the system offers a practical approach to the transcription of music into braille. Re-design of the music mode keyboard would enable the facilities offered automatically to be substantially increased. The incorporation of a compatible

Grade II braille system would enable literature mode to offer still wider facilities.

Computerised Braille in the Netherlands

M.J. Vliegenthart

The National Braille Committee in the Netherlands completed the revision of the current system for contracted braille in Spring 1976.

Parallel to the final report, a computer program has been published as a doctoral thesis. The program is written in Algol 60 for translation of text into the new contraction system.

The research on automatic translation has been stopped as far as literary texts are concerned. A great challenge will be the automatic translation of scientific formulae for mathematics, physics, chemistry, etc. The research for possible solutions may go in parallel with the aims for unification of the scientific braille code.

A Braille Letterpress for the Blind

A final report submitted to
The Smith-Kettlewell Eye Research Foundation

G.W. Ohlson and Frank A. Saunders

Project period: November, 1973 - October, 1975

Amount awarded: $300.00

Overall aim and summary of activity

We have constructed a prototype letterpress device using movable letterpress type for the production of braille materials. Unlike current methods of braille reproduction, this hand-operated braille press is eminently suitable for use by the blind for the production of limited quantities of specialised material, such as scientific reports, informational brochures, and time-dated literature.

Feasibility was demonstrated for a process whereby the embossing components of a braille cell could be cast in hot metal, thus providing a reliable and inexpensive source of movable type for use by blind persons in typesetting braille material. Sufficient type was cast to set three full pages of braille text.

The concept of type-cast braille cells was extended to include the flexibility and speed of the Linotype process. Molds were developed for the braille cell components and were made compatible with standard Linotype magazines, so that complete lines of braille text could be cast and assembled into page format.

Two Linotype machines, at a replacement value of $10,000 (used equipment) were donated to the Smith-Kettlewell Eye Research Foundation for use in this project by the San Francisco Newspaper Printing Company. The machines are currently undergoing necessary modifications and are

temporarily housed in San Rafael, California.

An electronic interface is being prepared which will control the braille linotype by means of ASCII-coded punched paper tape, as generated by a standard Teletype, and as transmitted by all TWX telephone lines. With this provision, the punched tapes routinely used in automatic typesetting (such as weekly newsmagazines and many books) could be used to produce braille editions of these materials, without the intervening need for time-consuming hand transcription.

The success of this initial feasibility study suggests the possibility of a sheltered workshop operated by blind persons, dedicated to the preparation, proofreading, and publication of brailled materials for the blind community.

Detailed description of project activities

Hand-set movable braille type, composed and proofread by the blind. As originally conceived by Ohlson, the concept of movable braille typesetting divides the braille cell into three horizontal segments. Each segment contains either (1) two dots, (2) one dot, which can be oriented either left or right, or (3) no dots. These three segments are sufficient to construct all 64 possible braille cells; they are easily assembled by hand from three component bins, and are easily redistributed following the printing run.

Molds for casting the individual segments were prepared in the IMS Instrument Shop by Jack Shore. Using these molds, MacKenzie-Harris, Inc. cast sufficient type to compose three full pages of braille text. With these prototype materials in actual use, we were able to estimate the time required (approximately 30 minutes) for a moderately proficient blind person to compose one page of braille type.

Each composed page is immediately available for proofreading by the blind person who has assembled it. The completed pages are then transported to a conventional print-

shop with a cylinder-type proof press, which embosses the customary braille paper by rolling it across the type matrix.

The life of the individual braille segments is estimated at over 20,000 impressions.

The advantages of the above approach are numerous:

(1) Composition and proofreading of the braille text is under the direct control of the blind person who originates the material.

(2) The method is labour-intensive, requiring no sophisticated machinery, processing, operating costs, or maintenance. The method is highly suitable for use in developing countries where communication facilities are otherwise limited.

(3) The process permits interpoint, or double-sided embossing of each page.

(4) The format is flexible and direct, permitting the incorporation of raised-line drawings and other tactile representations. It should find a particular application in the education of the blind, both for the production of brailled texts and supplementary material, and for the preparation of books in which the text is both printed and embossed, for the convenience of sighted teachers, parents, and peers of blind schoolchildren.

Linotype composition of whole-line slugs of braille type. Linotype setting of braille, like conventional print, offers several advantages over the hand-composing process. These advantages include speed, flexibility of format, and ease of redistribution of used type. The latter advantage is significant; a page of hand-set type must be broken down and returned to the individual segment bins prior to recomposition, while used Linotype slugs are simply melted

down for recasting.

An additional major advantage to the Linotype process is the possibility of control by punched paper tape. Text may therefore be prepared and edited off-premises; the completed tape is then delivered to the printshop for braille casting and printing.

Finally, much contemporary literature, from books to periodicals to daily newspapers, is at present composed from ASCII-coded paper tape or magnetic tape cassettes. These "masters" are discarded after use. Given the proper encoding and transformation, these tapes could be used to produce a near-simultaneous braille edition of the printed text, at significant savings of time and cost. The alternative, hand transcription into braille, is expensive, is dependent upon sighted volunteers, and requires weeks or months of advance preparation; braille copies are usually prepared in single unit quantities.

A computer-controlled process. Linotype preparation of braille, while simple in concept, has certain technical requirements which to date have prevented the concept from being put into practice. Each 5-inch line (or slug) of braille will contain 20 braille cells; each cell will be assembled from two vertical segments, one for the left half and one for the right. Each half is selected from 7 possible segments: dots 123, dots 12, dots 13, dots 23, dot 1, dot 2, and dot 3. There are seven left segments and seven right segments, plus a blank segment used in either position, for a total of 15 different segments.

The ASCII code fed into the Teletype reader contains cell-by-cell information. Each cell must be divided into left and right halves, the appropriate segments selected, and the appropriate Linotype channels accessed to build the character. At the completion of each line, a slug is cast and transferred to the column for printing. This encoding task normally would require the services of a dedicated minicomputer, and therefore has not been

practical or cost-effective to this date. The task, however, is ideally suited for the low-cost microcomputer assemblies ($3000-$4000 at current prices, and declining) and read-only-memories which have just become available. We are preparing a simulation of such a system to demonstrate its feasibility, its flexibility, and its simplicity of operation.

The advantages of contracted braille. Conventional braille is a direct letter-by-letter encoding of alphabetic character to braille cell. Significant savings of space and reading speed are achieved by the use of contracted braille, referred to as Grade II and Grade III, as employed by sophisticated and well-educated blind users. The preparation of contracted braille material is expensive and requires skilled transcribers. The tape-controlled Linotype process offers several important advantages in this regard. First, the input tape can be prepared by the blind author who has written the material, using contracted braille at his volition. Second, a significant number of contractions, e.g. 'and', 'the', '-tion', can be stored in the microcomputer's read-only-memory as a dictionary; when these words are encountered in an uncontracted input tape, the contracted or uncontracted transcription can be selected according to the readership for which the material is being prepared.

The preparation of educational material. At present, a significant need exists for educational material printed both in conventional type and in braille, and in any language. Potential users include sighted parents reading to their blind children, while allowing the child to "read along" in braille as a training exercise; sighted teachers conducting classes for blind and sighted children; blind teachers conducting classes for blind and sighted children; blind teachers conducting classes for blind and sighted children; and other educational and reference materials intended for use by the blind as well as the sighted.

Little such material is currently available. The Thermoform process, which produces raised-line drawings and braille in plastic, is not suitable for simultaneous printing; the plastic is brittle and bulky and aesthetically unaccommodating. A process called Twin-vision[1] involves the embossing of printed materials with an addressograph-multigraph press; the process is slow, expensive, and it is difficult to get replacement type. As a much preferable alternative, we envision the preparation of multicolour printing plates and linotype-cast braille plates; braille-quality pages are first printed via conventional plates and then embossed with braille plates, fully utilizing the economy of lithography.

Educational and vocational implications. In brief, these include:

(1) Great simplicity and flexibility in preparing braille training material with expanded inter-character and inter-line spacing, for teaching material to recently blinded adults (e.g. veterans.);

(2) The preparation of sufficient quantities of compatible ink print/braille elementary educational texts to make possible true integration of blind and sighted children within the classroom;

(3) The gainful employment of blind persons in transcribing braille material, rather than the current dependence upon sighted volunteers;

(4) The gainful employment of blind persons in operating braille printshops featuring inexpensive, rapid preparation of material for the blind community.

---

[1]Jean Norris, Publishing Division, American Brotherhood of the Blind, 18440 Oxnard Street, Tarzana (Los Angeles), California 94351

Future Plans

The two Linotypes and a recently donated proof press with a 14-inch cylinder are temporarily housed in a warehouse. A machinist is contributing his time in reconditioning and adapting the equipment for braille use.

We intend to solicit start-up, seed support for the first year of operating, starting approximately January 1, 1976. The estimated annual budget is $22,500., including rental of space, salary for one full-time operator, and consumable supplies required for normal print shop functions.

Intermediate support funds will be sought from the Bureau of Education for the Handicapped (U.S. Office of Education) and from the Rehabilitation Services Administration. Once the feasibility of the concept has been demonstrated, and once a market has been established, we believe that the braille print shop can approach a self-supporting status, partly through individual services to blind users and partly through contract printing of educational materials for State and Federal agencies.

French Embosser/Terminal

SAGEM (Societe d'Applications Generales d'Electricite et de Mecanique, 6, avenue d'lena, 75783 Paris, France) announces the serial production of a braille embosser/terminal (REM 8 BR) designed to be fed machine-readable input. Specification:

Code utilised: alphabet reduced from the CCITT No. 5 to 7 significant bits plus one parity bit adapted to writing braille.

Character structure: 10 to 11 bits (single or double stop).

Transmission speed: 110 to 150 baud (adjustable with interrupt).

Telegraphic capability: margin greater than 40 percent.

Embossing speed: 10 to 15 characters per second.

Cell definition: 6 dot (three lines, two columns).

Cell dimensions: circa height 5mm (.2 inches), width 2.5mm (.1 inches).

Cells per line: 31

Horizontal spacing: 6.35mm (.25 inch) (4 characters).

Vertical spacing: 10.16mm (.4 inch).

Paper stock: fan-fold supply.

Local commands: carriage return, end of page.

Working environment: 0 to 50 ^{o}C.

Storage environment: -5 to 70 ^{o}C.

Mains power supply: 115/127/220/240 volts, +/- 10 percent, 50/60 Hz.

Power drain: about 120 VA

Approximate dimensions: height 235mm (9.25 inches) width 525mm (20 inches), depth 525mm (20 inches).

Weight: 25kg (55 pounds).

Conforms to advisory specification V-24 of the CCITT; usable with dedicated telephone line.

Price: NF 10,000 (approximate U.S. $2114)

Editors' footnote: The physical quality of the braille, submitted with this specification, was exceptionally fine.

The Maure "Smart" Terminal System

In a collaborative enterprise involving the AFB; Electro-Mechanics., Inc., of Hartford, Connecticut; the Connecticut Braille Association; and possibly the Department of Education of the State of Connecticut, a design has been drawn up for a multipurpose braille system that will aid volunteer groups in enhancing the availability of braille. The heart of the system comprises a device that will generate braille information and record it on cassette tapes via keyboard entry; the device also contains those added components (ROM program chips, UART, and additional keyboard interface keys) that will allow several additional functions to be performed. Among these are: search and editing capabilities of the recorded braille information; playback of braille information in both optical and tactile forms generated cell by cell across a line of text; capability to act as a recording device for an optical scanner for capture of already brailled text, plus a display to verify the scanner's performance; formatting the tape; monitor of an external printer's operation; driving a transitory page-at-a-time braille display (see description of press braille scheme in this Newsletter); and search, display, and editing functions for the blind user. Since the ergonomics of the terminal are still being worked out, we append here a schematic illustrating the several applications of the terminal. Further details will be carried in a future issue.

Further information can be obtained from D.R. Maure, Electro-Mechanics Inc., 150 John Downey Drive, New Britain, Connecticut 06051, U.S.A. (Tel. (203) 224-3183).

			INPUT	OUTPUT	FUNCTION PERFORMED
A	Tape Brailler + Electronics	⟷ Cassette Recorder	Printed Page	Magnetic Tape	Record Edit Display Search
B	Optical Scanner + Electronics	⟷ Cassette Recorder	Braille Copy	Magnetic Tape	Record Display
C	Cassette Recorder + Electronics	⟷ Triforma-tion Printer	Cassette	Braille Copy	Print Edit Search Control Display
D	Cassette Recorder + Electronics	⟷ Mechanical Tactile Brailler *AFB	Cassette	Braille	Display Edit Search Control

ADVANTAGES	DISADVANTAGES	DEVELOPMENT COST	PRODUCTION
1) Speed 2) Less labour 3) Lower cost copy 4) Less storage space	1) New equipment req'd (Triformation) 2) Higher cost brailler	$9,000 - $30,000 ?	$500 - $1500 + Cassette
1) Lower cost copy 2) Less storage space 3) Uses existing copy 4) Uses existing brailler	1) Labour same 2) Retrofit second copy only	$50,000 + $6,000 if available	$3,000 (?)
1) Lower cost copy 2) Less labour 3) Faster copy turn-around 4) No Thermoform	1) Requires investment 2) No figures (manual)		$9,000
1) 25c/copy vs $7.00 2) More accessible 3) Teaching aid 4) Job opportunities 5) Less storage space	1) Major development 2) Cost of Mech. Brailler 3) Accessories required	$100,000	$3,000

Grade II French Automated Braille

J.M. Charpentier

The aim of the project is to develop a program to translate French ink print into contracted grade II braille, and is in two parts:

The first part examines the text step by step which has been typed in by an operator. The lines are 40 characters long. Each time, the program checks if the character is of various types:

(i) a separator (e.g. blank, semicolon)

(ii) a digit

(iii) an already contracted braille expression (e.g. "c'est-à-dire")

If one of these conditions applies, the separator, digit or expression will be translated first. If none of these conditions applies, the program stores the character and studies the next character until it finds a separator. I think that this program will be able to translate mathematical signs by adding a small subroutine. When the program has found a separator, it has a word and this word is sent to the second part of the program.

The second part of the program translates words into contracted braille. This requires several operations:

(i) Some words like 'afin', 'route', 'université' are already translated. The first thing the program will do, is to see whether the word is already stored in a library kept on a peripheral.

(ii) The second operation is to see if the word ends in 's', 'es', 'e', or by a suffix like 'able', 'ation', 'que'; in this case, these terminations may be added to the words already translated.

(iii) After these operations, the program will examine the word character by character; each time it checks whether it is before a group of characters represented by a single braille sign. If it isn't, the letter is translated and the next letter will be studied. If it is, the program will test the different conditions these groups have to perform e.g. only at the end of the word, only after a vowel. When all the conditions have been checked, the group is translated and the first character after the group is studied. When the whole word is translated it is output.

At present each braille sign is represented by a number; in July I will take delivery of a braille terminal made by SAGEM.

The operator must comply with a few rules:

(i) accents are represented by: + = actue accent
/ = grave accent
* = circumflex
= = dieresis

the sign must be placed before the letter to which it refers (this will probably be changed for something more convenient).

(ii) at the end of a line, the operator cannot put dashes.

(iii) a dash must be between blanks.

(iv) a dash of function must be between letters.

(v) foreign words must be preceded by <.

(vi) proper names must be preceded by >.

(vii) $ before 'ae' or 'oe' in case of Latin words (e.g. et coetera = et c$oetera).

This program can run on a WANG 2200 system. This system has a capacity of 12k words and the libraries can be stored on cassettes or discs.

Up till now, I have worked only with cassettes and the computation time is rather long; so I think that with a disc unit, this time will be reduced.

Braille Projects at Paul Sabatier University of Toulouse

Monique Truquet

The Computer Science Department at Toulouse has put the finishing touches to a program which translates ink print texts into grade I and grade II braille. The project has two aims: first to translate school-books, novels, and then to apply this technique to computer-assisted instruction.

Research

We have started to automatically produce Spanish grade II braille but as we need further information about the use of some Spanish contractions this work has been stopped. We are just beginning to translate mathematics into braille; the braille system is so complex and it needs so many characters that we are having some programming problems.

Teaching

We would like to adapt our method to computer-assisted instruction for physics, mathematics and computer science.

The Society SAGEM[1] is trying to produce a braille embosser which will allow the blind students to work alone. The keyboard of that device will be the same as that for sighted people and this necessitates the creation of an 'informatic braille' adapted to computer science.

Production

At present we translate literary texts - French into grade I and II and some foreign languages into grade I. These braille texts will be used by a blind association for their pupils. But in the near future, it is possible that we will be translating books and magazines for a library.

---

[1]Societe d'Applications Generales d'Electricite et de Mecanique

In addition to blind schools, blind students of the literature University are interested in our translations. Some of them, three years ago, have applied to a National Concourse and due to our translations they have been admitted. At that time braille texts were printed from right to left on a normal IBM 1403 and they were read on the reverse from the left to right.

Now the braille documents are produced on a braille embosser built, on our request and due to IRIA[2], by the Society SAGEM. This embosser can run off-line or as an interactive computer terminal.

Conclusion

We would like to finish Spanish Grade II braille when we receive the necessary information. We would like to make contact with French and foreign persons interested in the automated translation of braille mathematics. I think we need a new grade II braille which is more logical and easier to be programmed.

---

[2] Institut de Recherche d'Informatique et d'Automatique

Research at Münster University

H. Werner

A program for the automatic translation of ink print into braille, Grade 2, was developed at the Computation Centre of the University of Münster by W. Dost, B. Eickenscheidt, and H. Werner. It is now available in a Mark V version. The program has been used for the last eight years to produce a braille news journal for the blind using excerpts from the two German news-weeklies. Die Ziet and Stern. Five thousand copies are distributed, every two weeks, at no charge to the reader.

The program has been used also in three other German-language braille producing centres - in Heidelberg, in Leipzig, and in Vienna.

Full documentation of the program will be completed shortly, and will be made available to anyone interested.

Using the experience gained in using this program, and in producing the news publication, we are embarking upon the creation of a new concept for the translation program. It will be based on the long-term linguistic investigations of Dr. Splett, and the logic research of H. Slaby; and will incorporate refinements of the linguistic-analytical approach and new methodological approaches.

In the last several months we have discovered increasing interest in our braille work, and have been visited by, and asked questions from, several East European countries, and from as far away as Australia.

Automated Braille Research at the National Physical Laboratory

J. Howlett

Work is being done in the Information Systems Group of the Division of Computer Science, National Physical Laboratory, on the automatic production of braille from an interactive information system.

The NPL Design Office and Workshops in cooperation with the Division of Computer Science and Computer Field Maintenance Ltd., have developed an attachment for the production of high quality braille, for use with a chain printer attached to the NPL Data Communication Network. The output will in the first instance be from "Scrapbook"[1], an interactive system for document production storage and retrieval, which was developed by the Information Systems Group. Scrapbook is widely used throughout NPL by both scientific and office staff who have no knowledge of computers and could be a powerful communication aid for the visually handicapped. The intention is to offer braille as an alternative to ink print.

The attachment is experimental and being patented. Minimal software has been written for the production of Grade I braille. The next step will be to consider the provision of a fast "Grade 2" braille translator possibly using a micro-processor.

In addition, the human/computer interaction group are studying the use of an interactive information system by a blind person. Various possible media such as tones, transient ("soft copy") braille, and synthesised speech are being considered.

---

(1) Cashin, P.M., Robinson, M.G. and Yates, D.M. Experience with Scrapbook, a non-formatted data base system. Information Processing 74: Preprints of IFIP Congress 74, held at Stockholm, August 1974, edited by J.L. Rosenfeld, Amsterdam and London, North-Holland, 1974, 5, 1012-1016.

Recent Publications

Gill J.M. & Martin M.D. *"Inspec in Braille"*.
IEE News, June, 1976, p. 3.

Hampshire B.E. & Whiston T.G. *"Factors in the Design of Braille Provision Systems"*.
New Outlook for the Blind, Vol. 70, No. 4, April 1976, pp 137-142.

Truquet M. *"French Grade II Translator Program"*.
AFIPS Conf. Proc., Vol. 45, June 1976, pp 205-207.

"A System of Braille Notation on Mathematics, Physics, Astronomy and Chemistry: A Manual. Parts I & II".
All Russia Association of the Blind, Moscow, 1975
444 pp. Copies in English available from B. Zimin.

"A System for Producing Braille Special Codes which is Compatible with Automatic Translation Programs".
Warwick Research Unit for the Blind, March 1976, 7 pp.

Revised or New Addresses

Berkowitz Dr. M.
Department of Research and Technological Development, American Foundation for the Blind, 15 West 16th Street, New York, New York 10011, U.S.A.

Biesemeier Ms. P.
Argonne National Laboratory, 9700 South Cass Avenue, Argonne, Illinois 60439, U.S.A.

Charpentier J.M.
Laboratoire de Recherche pour la Reinsertion Professionnelle des Handicapes, Conservatoire National des Arts et Metiers, 292 Rue Saint-Martin, 75141 Paris Cedex 03, France.

Clark L.L.
Basic and Programmatic Research Division, Department of Research and Technological Development, American Foundation for the Blind, 15 West 16th Street, New York, New York 10011, U.S.A.

Dorf Ms. M.
Division for the Blind and Physically Handicapped, Library of Congress, 1291 Taylor Street N.W., Washington D.C. 20542, U.S.A.

Dowling Dr. J.
Worcester Polytechnic Institute, Worcester Road, Worcester, Massachusetts 01609, U.S.A.

Duran P.
Protestant Guild for the Blind, Belmont Street, Watertown, Massachusetts, U.S.A.

Epstein Ms. B.
National Braille Association, c/o Sweet, 7737 Westbourne Court, Sylvania, Ohio 43560, U.S.A.

Evert C.F.
Department of Electrical and Computer Engineering, University of Cincinnati, Ohio 45221, U.S.A.

Hooper Ms. M.
1255 Pine Avenue, Clearwater, Florida 33516, U.S.A.

Howlett Ms. J.
Division of Computer Science, National Physical Laboratory, Teddington, Middlesex TW11 0LW, England.

Katz Ms. V.B.
2169 Seneca Drive, N. Merrick, New York 11566, U.S.A.

Krebs B.
2035 NE 164th Street, N. Miami Beach, Florida 33162, U.S.A.

Lass Ms. M.
5300 Hamilton Avenue, Apt. 804, Cincinnati, Ohio 45224, U.S.A.

Levine Ms. H.
5300 Hamilton Avenue, Apt. 1404, Cincinnati, Ohio 45225, U.S.A.

Mann Ms. A.
907 Lake Shore Drive, Apt. 2606, Chicago, Illinois 60611, U.S.A.

Maure D.R.
Electro-Mechanics Inc., 150 John Downey Drive, New Britain, Connecticut 06051, U.S.A.

Maure Ms. S.
Braille Institute of America, 741 N. Vermont Avenue, Los Angeles, California 90029, U.S.A.

McClean B.
School of Advanced Technology, State University of New York at Binghampton, Binghampton, New York 13901, U.S.A.

Nemeth Prof. A.
University of Detroit, 16240 Fairfield Avenue, Detroit, Michigan 48221, U.S.A.

Oster J.
Port City Press Inc., 1323 Greenwood Road, Baltimore, Maryland 21208, U.S.A.

Robichaud J.
Massachusetts Commission for the Blind, 39 Boylston Street, Boston, Massachusetts 02116, U.S.A.

Saunders Dr. F.A.
Smith-Kettlewell Institute of Visual Sciences, 2232 Webster Street, San Francisco, California 94115, U.S.A.

Simpson Dr. S.
Duxbury Systems Inc., P.O. Box 1523, Duxbury, Massachusetts 02332, U.S.A.

Skovmand J.
Department of Development, Statens institut for blinde og svagsynede, Rymarksvej 1, DK 2900 Hellerup, Denmark.

Solente Melle
Laboratoire de Recherche pour la Reinsertion Professionnelle des Handicapes, Conservatoire National des Arts et Metiers, 292 Rue Saint-Martin, 75141 Paris Cedex 03, France.

Sullivan J.
123 Lowell Drive, Stow, Massachusetts 01775, U.S.A.

Tate B.
219 Nevada Drive, Erie, Pennsylvania 16505, U.S.A.

Watkins W.A.
American Printing House for the Blind, 1839 Frankfort Avenue, Louisville, Kentucky 40206, U.S.A.

Wilkinson Ms. S.
11 Farrs Lane, East Hyde, Luton LU2 9PY, England.

Wise T.W.
Triformation Systems Inc., P.O. Box 2433, Stuart, Florida 33494, U.S.A.

Zimin B.
All Russia Association of the Blind, Novaja Plostchad 14, Moscow, U.S.S.R.

BRAILLE AUTOMATION NEWSLETTER

December 1976

edited by

J.M. Gill and L.L. Clark

Warwick Research Unit for the
Blind,
University of Warwick,
Coventry CV4 7AL
England

American Foundation for the
Blind,
15 West 16th Street,
New York 10011
USA

Contents

	Page
Editorial	2
The Design of a Fast Braille Lineprinter by Ir A.N. Westland	3
Some Thoughts on PL/1 Braille Translators by P.W.F. Coleman	8
Available Page Braille Embossers by J.M. Gill	16
New Braille System in England	30
Compositor's Tapes in Czechoslovakia	30
Publications and Reports	31

Editorial

In the last few months, most of the developments in braille automation have involved new hardware. This does not mean that braille translation programs require no improvement. However writing the specifications for the next generation of braille translators is no trivial task. It will be complicated by the moves in various countries to revise their contracted braille systems. Also new types of translation program will be required if best use is to be made of microprocessors for producing braille. It has been suggested that the new programs should be natural language transferrable and should be capable of modification by someone with no knowledge of programming. The editors would welcome articles outlining the specifications for this next generation of translation programs.

The proceedings of the SIGCAPH/AFB workshop have not yet been published; the delay has been caused by Bob Gildea moving from Colorado to Massachusetts. Dr. M. Berkowitz has promised to send copies, free of charge, to all those on the BAN circulation list.

The International Guide to Aids and Appliances for Blind and Visually Impaired Persons will be published in the very near future. Copies can be ordered from The Publications Department, American Foundation for the Blind, 15 West 16th Street, New York New York 10011, USA.

The Design of a Fast Braille Lineprinter

Ir A.N. Westland

I. Introduction

The Dutch Library for the Blind uses at this moment, for its production of braille books in smaller quantities, modified braille typewriters ("Perkins"), which are driven by an electric motor and controlled by punched tape. These units have a speed of about four characters/second, working on normal braille paper (weight: 180 grams/sq. metre) coming from a roll of 250 mm width. These machines however, are used at speeds for which they were not designed, so they wear fast and produce braille of not too good a quality (unequal height of the braille dots and unequal distances between them).

In order to solve these problems: the relatively low speed combined with fast wear, leading to braille of poor quality, the laboratory of Fine Mechanics of the Mechanical Engineering Department of the Delft University of Technology was invited to design a new braille-embosser. After a study of the construction of normal printers the principle of line-printing was chosen, which means that each machine-cycle produces one new line of characters. In the case in question the printer is equipped with 40 braille-cells, each consisting of six pins in the braille-configuration. All pins that are to form the braille line are selected and then embossed, after which the paper is transported over one line distance (10 mm), ready for the next printing (embossing) cycle. This printer is able to print five lines/second and is equipped with a knife to cut the paper (coming from a roll) into pages after embossing.

II. Specifications to which the braille lineprinter complies

1. Distance from one braille-cell to the next (pitch):
   6 ± 0,05 mm (0.24 ± 0.002")

2. Distance between the lines:

10 ± 0,1 mm (0.4 ± 0.004")

3. Height of the braille dots:

0,5 ± 0,05 mm (0.02 ± 0.002")

4. Number of characters on one line: max. 40

5. Speed: 5 lines/second

6. Paper: Width 250 mm (9.85")
Weight 180 grams/sq. metre
(0.004 Oz/inch^2)

No pin feed holes necessary.

III. Description of the braille lineprinter

When we consider the possibilities for production of a braille dot in paper by means of a pin and a hole, there are two methods:

(i) The movement of the pin is controlled by a force; the resulting displacement of the pin is a function of the force and of the characteristics of the braille paper between pin and hole.

(ii) The movement of the pin is controlled by a form; the force exerted on the pin is a function of this (forced) displacement and of the characteristics of the braille paper.

An example of the first method is hitting the pin with the armature of an electromagnet (or by any other sort of hammer), while the second method can be demonstrated by the example of "pressing" the pin in the hole by putting pin and hole between the jaws of a vice. The displacement of the pin (and so the height of the produced braille dot) is controlled by the displacement of the jaws

of the vice (the "form" of the vice).

The ideal situation in the first case is that just enough energy is supplied to the pin to produce the braille dot (to deform the paper) and no system is needed to stop the pin in its movement after the correct height of the braille dot is reached.

One property of paper however is not being homogeneous in composition, so the amount of energy required to form a correct braille dot is not constant. So it is common practice to supply more energy than strictly needed and brake the pin (for instance by means of a collision) afterwards. These collisions mean extra noise and wear.

In this printer the second method was adopted: the movement of the pins that produce the braille is controlled by the form of the parts that generate this movement.

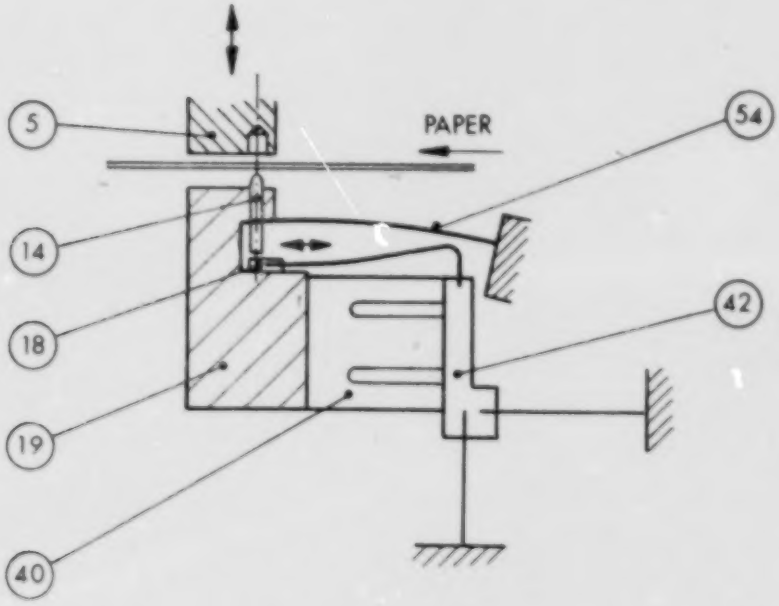

Fig. 1 The selection system

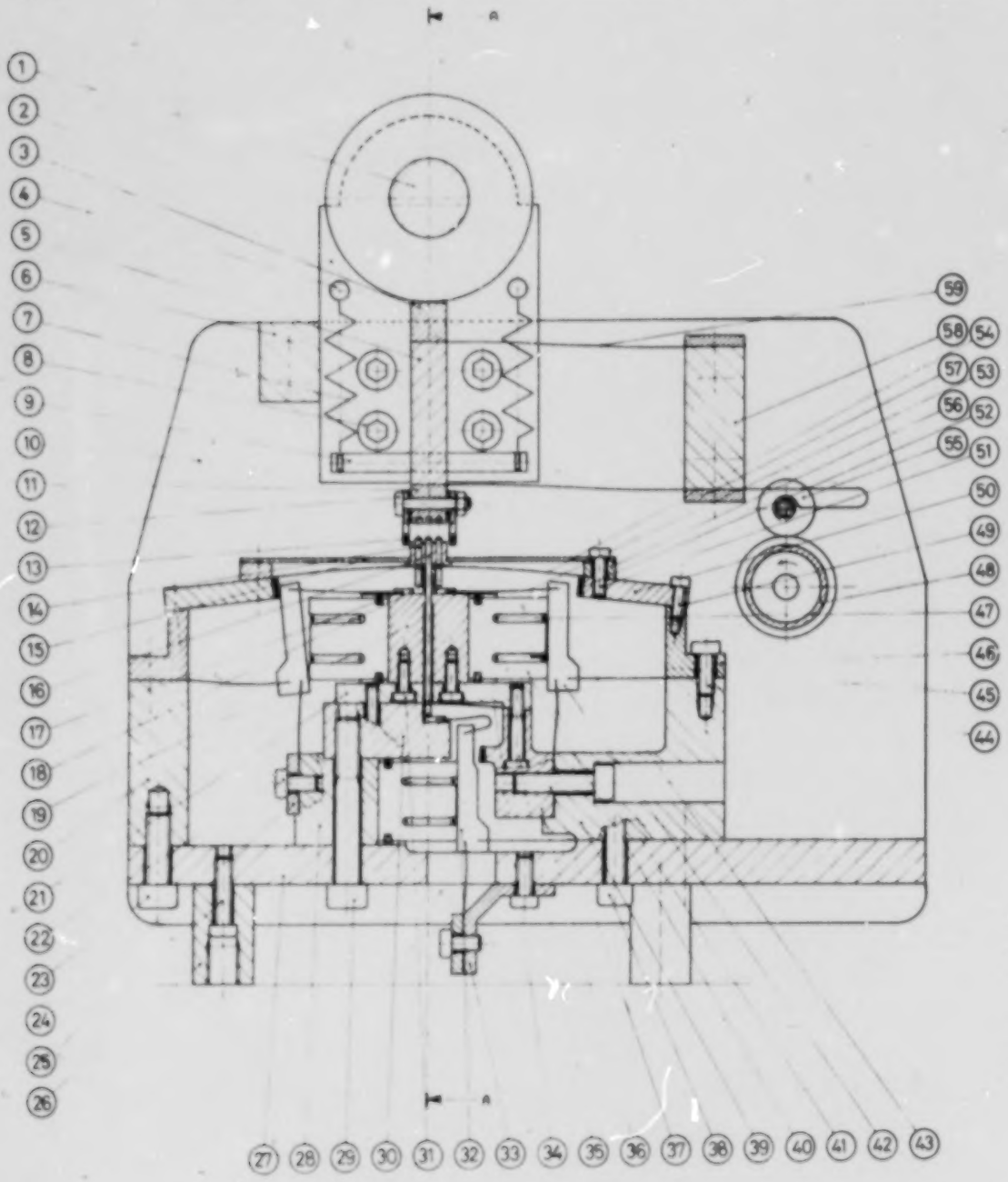

Fig. 2 The embossing mechanism

IV. The electronic control system

The electronic control system of the printer is set up for input by means of paper tape. So the input data

is in series form, but for correct switching of the electromagnets, the information must be fed in parallel into those magnets of the 240 magnets, that are to produce a braille dot. So part of the control system is a 240 bits shift register for this function of buffer memory. Furthermore the system contains 240 amplifiers as members between the logic (TTL) level and the coils of the electromagnets. Other parts of the electronic control system concern the correct timing of the switching sequence for electromagnets and paper transport steppermotor, related to the position of the driving shaft (and thus the position of the upper beam).

V. Future development

The first results of test runs with this printer are satisfying regarding the attained speed and the accuracy of the dimensions of the produced braille.

This result was not reached without several dimensional variations of the leaf springs in the prototype. This was primarily necessary because certain dynamic effects caused premature breakage of some leaf springs. During this modification period it was found that the accessibility for service purposes should be improved. Certain parts that should be easily replaceable are rather inaccessible, so future development is aimed at the construction of a printer with less parts producing one line in two embossing cycles. This new printer should have 2/3 of the parts of the present one, but have the same speed of five lines of complete characters per second. This second prototype should be ready in 1977.

This project was and is carried out without any additional external financing, by integrating it in the current mechanical engineering education program.

Some Thoughts on PL/1 Braille Translators

P.W.F. Coleman

Introduction

These notes represent the core of my thinking on a structured approach to braille translators over the past five years. They are not meant to be complete in any way, for the process of thought is by no means yet complete. I am purposely soliciting others' thoughts on this problem.

The language I think in, like most programmers, is the one on which I cut my teeth, and I apologise to those not familiar with it. However, it is also relevant as the language in which my first translation program was written from which my thought has proceeded. I hope in a later Newsletter to give the fruit of my thought in a structured program in English which should be easy to transliterate into any convenient programming language.

Historical Note

Between 1968 and 1971, I produced a braille translation program for Standard English Braille written in PL/1. This was essentially an experiment in speed and program versatility, and I have good reason to believe that this is still the fastest braille translator extant.

Features of the program included a generalised input procedure (very simple in PL/1), in which the input device and its characteristics was specified at run time via job control language; compression of source text to eliminate unwanted blanks and blank lines, hyphenation on output and two extra braille grades (for technical and PL/1-orientated users). It also handled computer braille as well as Grade I literary braille. All these options could be set when invoking the program, and reset by commands

embedded in the source text. These commands worked very well, but dynamic resetting of options does, of course, presuppose some degree of prior editing.

The program was not table-driven but data-driven, the rules for contracting being embedded in the actual code of the program, and not held in tabular form.

The central part of the algorithm was a series of statements which checked the current character to see if it was a letter: if it was not, then it was translated as it stood, the translation being an internal token consisting of a single EBCDIC character which was assigned to an output string OUTTEXT; the source text was held for this process in TEXT.

However, if a letter <u>was</u> detected, a similar check was made on the next character and if both were letters, the characters themselves were made the subscripts of a label array and a branch taken on its value:

```
IF¬((SUBSTR (TEXT, I, 1) < 'A'|
      SUBSTR (TEXT, I, 1) > 'Z') &
     (SUBSTR (TEXT, I+1, 1) < 'A'|
      SUBSTR (TEXT, I+1, 1) > 'Z')) THEN
    GOTO LABELS (UNSPEC (SUBSTR (TEXT, I, 1)),
                 UNSPEC (SUBSTR (TEXT, I+1, 1)));
    ELSE GOTO AA;
```

A check is made specifically that neither of the current character pair is a letter and the branch made if the test is false. For those not familiar with PL/1, UNSPEC returns the internal representation in the machine of its argument, in bit form, and SUBSTR returns a substring from the first argument, the second argument giving the starting point relative to the beginning of the string and the third the length of the substring. Label AA was the point at which a one-for-one translation took place.

LABELS was declared:

```
DECLARE LABELS (193:231, 193:231) LABEL
        INITIAL ((41 * 41) AA);
```

The way the array was then set up can best be seen from an example. The letter pair AB could be the first two letters of either ABOUT or ABOVE, contracted respectively to AB and ABV. Therefore the corresponding element of LABELS would be initialised to AB - note that the bounds of each dimension of the array represent the extreme ends of the EBCDIC upper case alphabet:

```
LABELS (193, 194) = AB;
```

The code at label AB was:

```
IF SUBSTR (TEXT, I+2, 3) = 'OUT' THEN
DO;
     BRL2 = 'AB';
     GOTO I5J2;
END;
IF SUBSTR (TEXT, I+2, 3) = 'OVE' THEN
DO;
     BRL3 = 'ABV';
     GOTO I5J3;
END;
```

Contrast this with the code at label DO (remember that the <u>word</u> DO, contraction D, is implicit in the letter pair itself):

Here a check must be made on the surrounding context - is the letter pair preceded by a space and succeeded by a space or punctuation?

```
DO: IF SUBSTR (TEXT, I-1, 1) = ' ' THEN
       IF SUBSTR (TEXT, I+2, 1) < 'A' |
          SUBSTR (TEXT, I+2, 1) > 'Z' THEN
       DO;
          BRL1 = 'D';
          GOTO I2J1;
       END;
```

Before each such test another check was made to prevent the text pointer running off the end of the source text:

```
IF I <=ITEXT (3) THEN
```

preceded the test for both 'OUT' and 'OVE' above. SUBSCRIPTRANGE and STRINGRANGE could have been used to achieve the same thing, but that would only register that the text had been overshot; in this way overshooting is prevented.

The final branch in each section, to ImJn, resets I and J, the pointers to TEXT and OUTTEXT, and branches back to the check for the next letter pair. For example:

```
I3J2: I = I + 3;
      GOTO J2;
      . . .
J2:   IF J > 49 THEN /* END OF OUTPUT LINE */
      DO;
           VBRL = BRL2; /* TEMPORARY FOR NEW
                                          CONTRACTION */
           CALL HYPHEN; /* HYPHENATING OUTPUTTER */
      END;
      ELSE DO;
           SUBSTR (OUTTEXT, J, 2) = BRL2;
           J = J + 2;
           . . .
           GOTO NEXT;
      END;
```

All this branching was not, of course, good programming practice, and certainly made for difficulties when debugging. The obvious answer was to replace labels AB etc. by procedures, the pointer resetting being done in a parameter-driven procedure. Such wide use of procedures was standard practice in earlier braille translation programs, but would

have incurred very heavy overheads in procedure prologues and epilogues on the IBM System/360 and similar machines (not half such a problem though on stack machines like the Burroughs range).

Current Thinking

For the past few years I have been working to circumvent this problem, trying to keep to a similar philosophy to the original program in order to maintain speed, but using a structured programming approach so as to simplify coding and testing. A by-product should also be a more compact program.

I have been working in PL/1, though I am currently generalising my approach as already mentioned. My current thinking is to replace the label array by a number of arrays of varying character strings. One such array or array group would contain contraction residues ('OUT', 'OVE' etc.), another array or array group having the contractions ('AB', 'ABV' etc.).

An array of integers would give the number of residues and contractions associated with each letter pair - if there were groups of residue and contraction arrays, then there would be a corresponding group of integer arrays. There would be another array or group containing bit strings, one bit for each possible rule to be checked, the bit settings for each string determining which rules were applied for a particular contraction (nothing new here, of course). The declarations might be:

```
DECLARE RESIDUES (193:231, 193:231, 10) CHARACTER (8) VARYING,
        CONTRACTIONS (193:231, 193:231, 10) CHARACTER (5)
                                                      VARYING,
        CONTRACTNUMBER (193:231, 193:231) FIXED BINARY,
        RULES (193:231, 193:231, 10) BIT (8);
```

When comparing residues and inserting contractions, two sets of values need to be known besides the above: the lengths respectively of residues and corresponding contractions. These can be calculated at the time of each comparison if storage is critical, but since this would add considerably to processor time, it might be better to calculate them once for all contractions at the beginning and to hold them in other arrays or array groups:

```
DECLARE (LENGTHR, LENGTHC) (193:231, 193:231, 10)
        FIXED BINARY;
LENGTHR (193, 194,2) = LENGTH (RESIDUES (193, 194,2));
LENGTHC (193, 194,2) = LENGTH (CONTRACTIONS (193, 194,2));
```

The values of the array elements could be set in the program by default, but could also be set by reading in tables from a file. In any event, this would be very much a table-driven program, in contrast to my previous code-driven one.

Thus, assuming a letter pair has been isolated, the following code might isolate the appropriate contraction:

```
DECLARE(SUB1, SUB2, CURRENT) FIXED BINARY;
. . .
SUB1 = UNSPEC (SUBSTR (TEXT, I, 1));
SUB2 = UNSPEC (SUBSTR (TEXT, I+1, 1));
/* SET TO INTERNAL REPRESENTATION OF LETTER PAIR */
/* CURRENT POINTS IN TURN TO CONTRACTIONS IN A GROUP */
IF SUBSTR (TEXT, I+2, LENGTHR (SUB1, SUB2, CURRENT)) =
     RESIDUES (SUB1, SUB2, CURRENT) THEN
DO;
     /* NOW CHECK EACH BIT SETTING OF THE CORRESPONDING
     RULES ELEMENT: IF TRUE APPLY THE APPROPRIATE RULE
     AND NOTE IF IT FAILS */
     . . .
     IF SUBSTR (RULES (SUB1, SUB2, CURRENT),3,1) THEN
          IF SUBSTR (TEXT, I-1, 1)¬ = ' ' THEN
               FAILED = '1'B;
```

```
        . . .
    END;
    IF ¬ FAILED THEN
    DO;
        SUBSTR (OUTTEXT, J, LENGTHC (SUB1, SUB2, CURRENT))=
            CONTRACTIONS (SUB1, SUB2, CURRENT);
        I = I + LENGTHR (SUB1, SUB2, CURRENT);
        J = J + LENGTHC (SUB1, SUB2, CURRENT);
    END;
```

The failure to find a contraction or rule match would result in a one-for-one translation, I and J being incremented by 1.

Note that the amount of executable code is minimal, being directly data-driven; also that we have again avoided using procedures; on any machine this program should generate very fast object code.

By contrast, the arrays will be large, a minimum of 300K bytes on an IBM System/370, 50K words on a Burroughs machine. This could be brought down by dealing in single letters rather than letter pairs, with residues one letter longer than otherwise. The respective figures are then around 8K bytes and 1.5K words. This would certainly make for a very compact program, at the expense of slower execution - though the speed reduction would probably be quite small, a reasonable tradeoff.

Most special cases may well be avoided by giving each contraction a priority relative to the rest, and having one smaller array for each priority level, each being in turn applied to the current letter or letter pair until a contraction and rule match is found.

However, special cases may still be treated as additional contractions, as they were in my original program. Thus the contraction WHEREVER would have a higher priority than, say, WHERE, and HERENCE than HERE.

Again, some special cases may also be avoided by alternate forward and reverse parsing of the source text word by word, as has already been done in several translators, and in standard PL/1 this is facilitated by the REVERSE function, e.g.:

```
/* ISOLATE A WORD IN THE TEXT, SETTING I TO POINT
   TO THE FIRST AND K TO THE LAST LETTER */
SUB1 = UNSPEC (SUBSTR (TEXT, K, 1));
SUB2 = UNSPEC (SUBSTR (TEXT, K-1, 1));
. . .
IF REVERSE (SUBSTR (TEXT, K-1-LENGTHR(SUB1, SUB2,
                                          CURRENT),
   LENGTHR (SUB1, SUB2, CURRENT))) =
   REVERSE (RESIDUES (SUB1, SUB2, CURRENT)) THEN
   /* APPLY RULES RELATIVE TO (K-2-LENGTHR(SUB1,SUB2,
                                          CURRENT))
      INSTEAD OF (I-1), AND (K +1) INSTEAD OF
           (I+2+LENGTHR (SUB1, SUB2, CURRENT))*/
```

In these notes I have only touched on the process of contraction-generation. I have not attempted to cover items such as handling numbers with or without an associated unit of measure, and the handling of punctuation including two-cell punctuation and opening and closing of quotation marks. I see the contraction problem as remaining the pre-eminent one, for this is the main process taking place in any braille translator.

I have for long been dissatisfied by the automatic recourse to trees and other complex data structures to handle this task. To me it has the flavour of the sledge-hammer cracking the nut, leading to some pretty slow translation.

It is for this reason that I am continuing work on my original lines using arrays, albeit character string rather than label, and in this respect my present efforts are just an attempt to refine and yet generalise the original concept.

This is not to say that the other methods are not valid, or may not in the end prove worthwhile. It is merely to justify my present work, to myself as much as anyone else.

Available Page Braille Embossers

J.M. Gill

This article summarises the main features of the four page braille embossers which are currently commercially-available. No attempt has been made to systematically evaluate these devices or even to verify the manufacturers' claims. However the names and addresses of known purchasers have been included so that you can obtain advice from those with experience in operating these embossers.

	Braillemboss	LED-1	LED-120	SAGEM
Maximum baud rate	150	110	1200	150
Page width (braille cells)	38 or 42	40	40	31 or 40
Quality of embossing	fair	excellent	good	excellent
Overall dimensions (mm)				
height	1555	940	1035	235
width	665	635	610	525
depth	580	635	840	525
Weight (kg)	84	114	114	25
Basic cost (US Dollars)	6500	6200	12000	3283
Keyboard included in basic cost	no	yes	yes	no
Double-sided embossing optional	no	no	no	yes
Advertised delivery (months)	0	3	3-4	6
Sales				
North America	8	5	27	0
Europe	5	0	3	7
Other Continents	1	0	0	0

Table 1 Some features of the page braille embossers

Braillemboss

Manufacturer:	Rehabilitation Engineering, Building 31-063, Massachusetts Institute of Technology, 77 Massachusetts Avenue, Cambridge, Massachusetts 02139, USA.
Foreign agents:	None.
Dimensions:	665 x 580 x 1555 mm high
Weight:	84 kg
Power requirements:	115 volts, 60Hz or 240 volts, 50Hz
Speed:	up to 16 cps
Interfaces:	EIA, TTY, others optional
Input codes:	ASCII
Delivery:	Immediate
Price:	US $6500.00
Guarantee:	None but every assistance is given to users in the form of advice on trouble shooting, spare parts when available or technical drawings.
Users: 1.	Sensory Aids Evaluation and Development Center, MIT, USA.
2.	Dr. J. Morrison, Department of Transportation, Massachusetts, USA.
3.	Perkins School for the Blind, Watertown, Massachusetts, USA.
4.	Worcester Polytechnical Institute, USA.

5. Honeywell, Phoenix, Arizona, USA.

6. D. Keeping, University of Manitoba, Canada.

7. T. Hicks, Engine Division, Rolls Royce, Bristol, England.

8. J. McSpadden, Internal Revenue Service, Little Rock, Arkansas, USA.

9. Arkansas Enterprises for the Blind, USA

10. Penn State University, USA

11. Learning Resource Center, Middle Tennessee State University, USA

12. Scientific Research Foundation, Israel.

13. University of Nottingham, England.

14. Warwick Research Unit for the Blind, University of Warwick, Coventry, England.

15. University of Lulea, Sweden

16. University of Bradford, England

LED-1

Manufacturer:	Triformation Systems Inc., 3132 S.E. Jay Street, P.O. Box 2433, Stuart, Florida 33494, USA. Tel. (305) 283-4817
European agent:	None.
Dimensions:	25 x 25 x 37 inches high
Weight:	250 lbs.
Power requirement:	115 V.A.C., 60Hz, 300 Watts
Speed:	10 cps
Interfaces:	TTY, EIA, others optional
Input codes:	ASCII, Baudot, others optional
Delivery:	90 days
Price:	US $6,200.00
Guarantee:	None

Purchasers:

1. J. Covici, 2 World Trade Center, 19th Floor, New York, NY 10048, USA

2. Western Union Co., 308 West Rt. 38, Moorestown, N.J. 08057, USA

3. Dow Chem. Co., Freeport, Texas 77541, USA

4. University of West Ont., Dept. of Computer Science, Room 2036, Eng. Science Bldg., London 72, Ontario, Canada

5. WLEN Radio, 149 1/2 So. Main St., Adrian, Mich. 49221, USA

LED-120

Manufacturer:	Triformation Systems Inc., 3132 S.E. Jay Street, P.O. Box 2433, Stuart, Florida 33494, USA Tel. (305) 283-4817
European agent:	None
Dimensions:	25 x 30 x 37 inches high
Power requirement:	115 V.A.C., 60Hz (other voltages available at extra cost)
Speed:	120 cps
Interfaces:	EIA, TTY, others optional
Input codes:	ASCII, EBCDIC, BCD, Correspondence, Baudot, others optional
Delivery:	90 to 120 days
Price:	$12,000.00
Guarantee:	None

Purchasers:

1. Arkansas Enterprises F/T Blind, 2811 Fair Park Blvd., Little Rock, Arkansas 72204, USA

2. John Merz, 109 Maple Lane, Hillsmere Shores, Maryland 21404, USA

3. University of Calif., Berkley

4. General Mills, Inc., 9200 Wayzata Blvd., Minneapolis, Minn. 55426

5. State of Information, Systems Center, State of Utah, Room 104-State Office Bldg., Salt Lake City, Utah 84114, USA

6. University of Manitoba, Computer Center, 603 Engineering Bldg., Winnipeg, Manitoba, Canada R3T 2N2

7. Curtis Landtroop, General Motors Corp., 767 Fifth Avenue, 25th Floor, New York, NY 10022, USA

8. Rev. Wesley Price, Protestant Guild F/T Blind, Inc., 456 Belmont St., Watertown, Mass. 02172, USA

9. University of Louisville, Computer Services F/T Blind, Room 358-Life Science Bldg., Louisville, Kentucky 40208, USA

10. Dr. James Slagle-Code 5407, Naval Research Lab., 4555 Overlook Ave. S.W., Washington D.C. 20375, USA

11. Robert Watson, State Services F/T Blind, 1745 University Ave., St. Paul, Minn. 55104, USA

12. Mel Sauer, P.O. Box 660, c/o Kolt Radio Station, Scottsbluff, Nebraska 69361, USA

13. Internal Revenue Service, 3505 Broadway, 7th Floor, Oakland, Calif. 94611, USA

14. Internal Revenue Service, 600 Arch St., 6th Floor, Phila., PA. 19106, USA

15. Internal Revenue Service, 301 N. Lamar St., Jackson, Miss. 39202, USA

16. Volunteer Services F/T Blind, 919 Walnut Street, Phila., PA. 19107, USA

17. Learning Systems International Ltd., Canadian Gov., Systems Center, Gov. Adm. Bldg., Regina, Saskatchewan, Canada

18. Computer Science Center, University of Maryland, College Park, MD. 20740, USA

19. Nederlandsche Blindenbibliotheek, Noordwal 7, 'S-Gravenhage, The Netherlands

20. Columbus Technical Institute, Resource Center F/T Blind, Aquinas Hall, RM 107, 550 East Spring Street, Columbus, Ohio 43215, USA

21. Internal Revenue Service, 412 Main St., Wichita, Kansas 67202, USA

22. IBM Corp., Essex Junction, Vermont 05452, USA

23. Dept. of Navy, 1420 Eads St., South Arlington, VA., USA

24. Social Security Adm., Jersey City Telesensory Center, 30 Montgomery St., 7th Floor, Jersey City, N.J., USA

25. Board of Ed. Services F/T Blind, Eng. Bldg., University of Conn., Storrs, Conn., USA

26. Rockwell International, 12214 Lakewood, Downey, CA 90241, USA

27. Royal National Institute for the Blind, 224 Great Portland St., London W1N 6AA England

28. Phillip Hall, 80 Dalbury St., Apt. 210, Worcester, Mass. 01609, USA

29. Northwest Foundation F/T Blind, 3411 So. Alaska St., Seattle, Wash. 98118 USA

30. Warwick Research Unit for the Blind, University of Warwick, Coventry CV4 7AL, England.

SAGEM

Manufacturer: Societe d'Applications Generales d'Electricite et de Mecanique (SAGEM), 6 Avenue d'Iena, 75783 Paris Cedex 16, France.
Tel. 745.14.60
Telex: 610762F
Cables: Telesagem - Paris

Agents: M. Passemard, SAGEM Corp., P.O. Box 445, 35 South Main Street, Derry, New Hampshire 03038, USA
(Tel. (603) 432-2013 and Telex 940478).

SAGEM B, 51 Rue d'Arlon, BP 12, 1040 Brussels, Belgium.

V. Thompson, 11 Poulton Avenue, Sutton, Surrey, England
(Tel. 01-644 6402)

SEBS Nederland, Kanaalweg 25-27, BP 174, 3130 Capelle A/D Ijssel, The Netherlands.

Hans Puttgen, Grev Turegatan 73, 11438 Stockholm, Sweden.

SAGEM have agents in many other countries - please contact Paris office for names and addresses.

Prices: TEM 8BR

Electronic modular terminal, send receive, 8 levels for embossing "Braille" characters (embossing of 31 characters per line, paper width 240 mm)

Unit price, ex-works ... FF. 20.900,00

Options

- punching block with logic cards
  ... FF. 1.860,00
- tape reader with logic cards
  ... FF. 1.240,00
- both sides embossing
  ... FF. 1.350,00
- embossing of 40 characters per line, paper width 310 mm according to data processing requirements
  ... FF. 800,00

REM 8BR

Electronic modular terminal, receive only, 8 levels, for embossing "Braille" characters (embossing of 31 characters per line)

Unit price, ex-works ... FF.16.830,00

Options

- built-in punching block with logic cards
  ... FF. 1.860,00
- both sides embossing
  ... FF. 1.350,00
- embossing of 40 characters per line, paper width 310 mm according to data processing requirements
  ... FF. 800,00

(Note US $1 is about 5 French Francs)

Dimensions: 525 x 525 x 235 mm high (c. 20 x 20 x 9.25 inches high) for REM 8BR. The TEM 8BR is 630 mm deep.

Power requirements: 120 VA at 115/127/220/240 volts, 50/60Hz

Speed: 110 or 150 bauds

Code:	CCITT No. 5, ASCII, others optional
Interfaces:	EIA, TTY, others optional
Delivery:	TEM 8BR - 8 months REM 8BR - 6 months
Maintenance:	A technician can be trained free of charge in Paris (does not include travel or hotel expenses). The maintenance manuals are supplied free of charge in various languages including French and English.
Guarantee:	The equipment is guaranteed for a period of 12 months against any defect of design and manufacture, from the date of receipt of the equipment. During this period, SAGEM will supply or repair, free of charge, any part recognised as faulty further to unusual wear, provided its use has conformed with the manufacturer's standards.
Purchasers:	Only started marketing the equipment in Autumn 1976 and there are a considerable number of enquiries from potential purchasers. Sales so far:

1. Conservatoire National des Arts et Metiers, 292 Rue Saint Martin, 75141 Paris Cedex 03, France.

2. Ecole Nationale Superieure des Telecommunications, 46 Rue Barrault, 75013 Paris, France.

3. Association pour la Sauvegarde des Enfants Invalides, 22 Rue de la Croix Baragnon, 31073 Toulouse Cedex, France.

4. Association Valentin Hauy, 3 A 9 Rue Duroc, 75007 Paris, France.

5. Ministere des Finances, Chef du Bureau M3, 9 Rue Croix des Petits Champs, 75001 Paris, France.

6. Amicale des Standardistes Aveugles de France, 16 Rue de la Folie Regnault, 75011 Paris, France.

7. Universite Paul Sabatier (Ver Informatique), 116 Route de Narbonne, 31077 Toulouse Cedex, France.

New Braille System in England

The annual report for 1975/76 of the Royal National Institute for the Blind says: "The report of an ad hoc committee of experts on braille production, particularly by computerised methods, has been received and adopted. A search for new premises is in progress to house what it is anticipated will be the most modern braille production centre in the world, more than doubling the RNIB's present output, thus extending the range of subjects and titles to meet the ever-increasing demand of braille readers, particularly students and those engaged in professional occupations."

RNIB are advertising for a programmer to work on this system. The advertisement also says "An early start will be made on an improved version of the Fortran text translation program (possibly using CORAL 66 or Algol)."

Compositor's Tapes in Czechoslovakia

The Czechs, who use uncontracted braille, plan to start using compositors' tapes for driving a stereotype machine. Ing. K. Vrana has developed a mini-computer program to automatically hyphenate words at the end of a line; this is technically feasible since Czech is a phonetic language. The system should be operational by the end of 1976.

Further details from Ing. K. Vrana, Vyvojove Dilny Cs. Akademie Ved, Husova 4, Praha 1, 110.00 Czechoslovakia.

Publications and Reports

Brown A. "Braille Remote Computer Terminal".

Computer Centre, Monash University, Australia, 1975, 31 pp.

The report first establishes the design specifications for a braille terminal and then discusses the problems of physical realization. The system decided upon incorporated an IBM Braille Electric Typewriter and a PDP 11/10 minicomputer.

Browne J. "Information Needs of Blind Lawyers".

Warwick Research Unit for the Blind, Sept. 1976, 37 pp.

The report includes a brief survey on the availability of legal material in error-free computer-compatible form. The most significant finding, in this respect, was that Her Majesty's Stationery Office (HMSO) make available legal statutes on digital magnetic tape.

Charpentier J.M. "Etude d'un Editeur Braille".

Conservatoire National des Arts et Metiers, Paris, November 1976, 25 pp.

This report, in French, gives further details of the project described in Braille Automation Newsletter, August 1976, pp. 85-89. Copies obtainable from Laboratoire de recherche pour la reinsertion professionnelle des handicapes, Conservatoire National des Arts et Metiers, 292 Rue Saint-Martin, 75141 Paris Cedex 03, France.

de Jong E.H. "A Braille Translator".

Massachusetts Institute of Technology, U.S.A. January 1976, 67 pp.

The main text documents a generalised minicomputer program written in ANSI Fortran for ink print to braille translation. The program produces a crude approximation to grade II braille and translates at about 10 words per minute.

Küppers H.J. "Braille Printing Techniques: Final Report".

Stiftung Rehabilitation, Heidelberg, 1976, 26 pp.

This report covers text editing for braille production, the use of compositor's tapes, digitally-controlled stereotyper and systems for producing embossed graphics. Copies, in German or English, are available from Dr.-Ing. H.-J. Küppers, Forschungszentrum fur Rehabilitation und Pravention, 6900 Heidelberg 1, Postfach 10 14 09, German Federal Republic.

Loeber, N.C. "Modified Standard Office Equipment for Braille Translation and Embossing".

IBM Corporation, Systems Communication Division, Los Gatos, California, U.S.A., May 1976, 12 pp.

This report describes the interfacing of a braille page embosser to a word-processing typewriter. The 'translation' is to a new braille code developed by the author.

Michel M. "Computer-produced Braille Translation of Serials: A Demonstration, Feasibility Study, and Implications for Librarianship".

City University of New York, 1976, 18 pp.

Copies available from M. Michel, 4205 17th Avenue, Brooklyn, New York 11204, U.S.A.

The report concentrates on the problems of producing single copies of articles in journals in contracted braille. This report is in the form of a proposal for a research project.

Snelders J.A.H. and Spanjersberg H.A. "Braille Apparatus Based on Microprocessors".

Switching Techniques and Data Processing Laboratory, Department of Electrical Engineering, Delft University of Technology, Mekelweg 4, Delft, The Netherlands, November 1976, 25 pp. Also published in Dutch in the Review of the Dutch Electronics and Radio Association (N.E.R.G.), Vol. 41, No. 4, 1976.

The paper describes a microprocessor-based braille system consisting of an input program, a code converter, a correction program and an output program to drive a braille page embosser.

"DJ's Plea, IBM Creative Development Effort Spark IBMers' Search for Tools for Blind".

IBM News, Vol. 6, No. 11, 24 Sept. 1976, 2 pp.

A single cell braille display has been interfaced to a word-processing typewriter. The article describes, in journalistic phraseology, the development of this device. A dozen systems are now being built for evaluation. Further details from M. Pandich,

Communications Manager, IBM Corporation, Box 12195, Research Triangle Park, North Carolina 27709, U.S.A.

"Rylec i uklady scalone".

Polska (Nasza Ojczyzna), No. 8, 1976, p. 9, 11.

The article describes the page braille embosser developed by Mgr inz Wojciech Zawistowski. The embosser operates at speeds up to 12 characters per second and it is claimed that it will cost not more than $160.

Further information can be obtained from Mgr inz W. Zawistowski, 00-901 Warszawa, Computation Centre, P.O. Box 22, Palace of Culture, Poland.

BRAILLE RESEARCH NEWSLETTER

(Braille Automation Newsletter)

No. 5, July 1977

edited by

J.M. Gill and L.L. Clark

Warwick Research Unit for
the Blind
University of Warwick
Coventry CV4 7AL
England

American Foundation for
the Blind
15 West 16th Street
New York 10011
U.S.A.

Contents

	Page
Editorial	2
Automatic Translation by Computer of Music Notation to Braille by J.B. Humphreys	5
Braille Books from Compositors' Tapes by C. Brösamle	13
A Note on Hybrid Braille Production by P.W.F. Coleman	19
The Expansion of Braille Production in Sweden by B. Hampshire and S. Becker	26
Plate Embossing Device by P.D. Gibbons and E.L. Ost	32
Braille Systems by J.E. Sullivan	35
An Analysis of Braille Contractions by J.M. Gill and J.B. Humphreys	50
Using Redundancy for the Syntactic Analysis of Natural Language: Application to the Automatic Correction of French Text by J. Courtin	58
TOBIA	60
Congress in Toronto	60
Recent Publications and Reports	61
Address List	63

Editorial

With this issue, the Braille Automation Newsletter changes its name to Braille Research Newsletter. We shall continue to use the former heading as a sub-heading for the purpose of continuity in libraries and to identify ourselves as to origin. The reason for a name change is in fact a recognition that the automatic generation of braille depends, from the point of view of optimal design, upon a consideration of the changes that eventually will occur in the braille code as a natural result of continual review by braille authorities to keep the code up-to-date. The point is that one can hope that whatever changes occur of an evolutionary nature in the braille code can also contribute to easing the task of automatic transcription of ink print into braille with the assistance of computer software.

We are careful to point out that the change in name is not a challenge to the braille authorities to change braille codes so that they will make transcription with computer assistance easier: we share the belief that man's work ought to be aided by machines where possible, but that man ought not thereby to be ruled by his machines! We emphasize, therefore, that discussions of research into legibility, intelligibility, learnability, and rationality of the several braille codes is part of the domain within which we operate. By doing so, we hope to open the field of discourse in these pages to those who are struggling mightily at the moment with the difficult and vexing questions of revisions in the codes that make sense among common language families; that respond to what is being discovered about the reading habits and behaviour of braille readers; and that consider the question of the influence of difficulties in learning braille on its easy acquisition as a reading code for those using tactile embossed materials. No hidden agenda is implied!

Issue Sequence

If, as seems likely while this is written in mid-June, that Issue No. 5 of this Newsletter will appear before Issue No. 4, a word of explanation is in order - if not only for the sake of those bedevilled librarians to whom we referred earlier! As indicated in our Issue No. 3, the fourth issue of the Newsletter would contain an editorial statement, and the content of the Proceedings of a workshop on the braille codes held in New York in June of 1976. That issue is a joint publication of the Association for Computing Machinery, the American Foundation for the Blind, and Warwick Research Unit for the Blind. Very simply, the production difficulties encountered in editing such a massive document have caused us to put off its publication date time and again. It would seem, however, that Issue No. 4 will appear some time during the Summer.

Questionnaire

Here we have a hidden agenda, and it is, simply, to assess whether you have found the Newsletter to be useful enough in your work that you would be willing to pay for it! We are asking this question even before deciding whether or not we will seek other sponsorship for the publication of the Newsletter. The reason is that we anticipated, in initiating this publication, that its interested audience around the world would be small; we are surprised, and of course pleased, to find that we were in error and the list is growing monthly - no doubt due at least in part of the interest of nonresearchers in the kind of thinking and construction in which researchers and developers are engaged. The cost of catering to this large a group of interested persons has gone beyond the rather meagre resources available to produce the Newsletter. We are faced with the need to limit its distribution only to bona fide researchers, a difficult role to enforce at best; or to open up its distribution to anyone interested at a modest price, which appears to us a better choice.

Your cooperation in ticking off your responses to these matters on the sheet enclosed would be warmly welcomed.

Automatic Translation by Computer of Music Notation to Braille

J.B. Humphreys

A system is being developed for input and digital storage of music notation using a computer, with automatic translation to the braille music code. The intention of the project is to produce braille music without any knowledge of braille being required of the person operating the system.

Investigation of existing systems involving computers for production of braille music suggests that none so far encountered approaches fully-automated transcription, most being described as "computer-assisted translation". In each case either intervention is required at the input stage by a skilled music braillist or the braille output is not exactly in accordance with the standard braille music notation (refs. 1-6). In view of the shortage of skilled music braille transcribers relative to the demand for braille music, there therefore remains a need for a system capable of producing acceptably accurate braille music quickly with minimal or not intervention by skilled braillists.

A computer program on the Sigma 5 computer at Warwick University for the input, storage, editing and translation to braille of inkprint music notation has now been developed to the point where it has been used to produce a good approximation to the braille transcription of a short piece of piano music.

The music notation is input on a graphical display unit connected on-line to the computer. While this is still commercially more expensive than the traditional punched card input, it appears to be a more suitable medium for music notation, which is essentially graphical rather than textual. Braille output is produced on an LED 120 braille embosser.

A graphical display unit normally has two forms of input: an ordinary alpha-numeric keyboard, and a means of addressing positions on the display screen, usually a joystick or light pen. The latter could in theory be used extensively in conjunction with the keyboard to specify the music notation by building up an image of the printed score on the screen and having software sort the information into order and make sense of it. This method has the advantage that the input operator would require virtually no knowledge of music notation, but would require considerable programming effort to implement and would be likely to be relatively slow to use. A more conventional alphanumeric code has therefore been adopted for the specification of the music notation itself while the joystick is used to identify particular musical items already displayed on the screen for editing purposes.

A number of alphanumeric languages for input of music notation to a computer have been used by various researchers for purposes of music analysis, cataloguing or printing (ref. 7). Many have limitations dependent on the particular project they were designed for, and there is no universally accepted standard code either for input or for digital storage of music notation. The Ford-Columbia language (ref. 8) developed for music printing is claimed to be capable of representing all aspects of printed music notation, but documentation for this language has only recently been published. The input language and data structure for storage of the music notation in the present project have therefore been designed specifically for this project, although hopefully with a capability for wider application.

The input language is interactively interpreted rather than compiled. Forms of input using punched cards have encountered particular problems with proofreading and correction of the data. The use of an interpreted language allows two immediate checks on the input: firstly, any character which in a particular context cannot be interpreted according to the syntax of the language is

rejected, with a message to inform the operator that this has been done: thus a bar line would not be accepted if the time count did not comply with the time signature, unless the check were specifically overridden by the operator; and secondly, the music is displayed graphically on the screen in an approximation to the printed score as it is input, enabling the operator to compare the music as displayed with the music as printed and correct the stored music as necessary, either before continuing or later. This also has the psychological advantage for the operator of immediate feedback.

The input language used is now adequate to encode the features which are relevant to the braille transcription of most of the general inkprint music symbols. Features of the inkprint not relevant to the braille, such as beaming together of notes, have not generally been incorporated but could be included without difficulty if for example it were required to produce a good quality print version from the digitally-stored music. More obscure notation and signs used only for particular instruments have also not yet been included but again the input language and data structure are flexible enough to be extended to include these as and when necessary. The language allows considerable abbreviation of repetitious passages for the convenience of the operator and is generally designed to minimise the number of keystrokes required. However, all music is stored in full and there is no obligation on the input operator to notice any repetition in the music.

The data structure for digital storage of the music is independent of the input language. This permits revisions and improvements in the input language without invalidating music already stored, and allows a fairly free format for input but a fixed format for storage. Digital storage comprises a random-access disc file containing three linked lists of blocks of data items

representing respectively inkprint music and unformatted and formatted braille. Data fields for individual items are of variable length, for compact storage and easy extension of the range of symbols which can be represented. Random access is particularly necessary to enable the use of linked lists for editing and for detecting repeated bars and passages in the translation to braille. It is assumed that in general a piece of music is too long for a significant part of it to be held in core storage at any one time.

Editing facilities have been developed to permit insertion or deletion of complete bars at any one point, and editing during input of the bar currently being input, as well as comprehensive editing of any specified bar after inputting is complete. Editing of a specified bar is requested by giving the bar and line numbers. The required bar is displayed on the screen and individual items may be inserted, deleted or modified using the joystick to identify items. Inserted items are displayed at the appropriate position on the screen. Deleted items are crossed out. The display may be refreshed at any time during the editing of a bar, with deleted items removed and the rest properly spaced. The file is not changed until the operator gives the instruction to end the edit.

All operations on the inkprint music representation are equally available for the braille representation with little extra complexity in the program since both are stored in a similar form. Although the goal of the program is to produce perfect braille, this may not be attainable in practice because some rules of braille music depend on musical knowledge which may not be readily computable, so it is desirable to have a capability for editing the braille produced by the translation process. Incidentally, braille may be input directly from the keyboard regardless of whether or not it represents music, thereby assisting the digital storage of braille codes which have not yet been transcribed automatically.

Archiving routines have been included in the program to enable individual pieces of music to be saved on and subsequently recovered from magnetic tape for permanent storage.

The translation from inkprint to braille has been divided into two separate passes. The first pass, the translation proper, produces and stores bar by bar a braille representation of the music. This pass includes such things as detection of repeated bars. The second pass, formatting, produces from this unformatted braille a representation of the final braille output, formatted according to the bar-over-bar layout of standard braille music notation (refs. 9-10). This division into two passes appears generally simpler than a single-pass translation, and also allows access to the braille if necessary at the intermediate stage. Although the translation is partially dependent on the final layout, the feature which would cause the greatest difficulty, splitting of bars at the end of a line, is not normal practice unless a bar is too long to fit onto a single braille line, in which case any format dependencies can be detected during the first pass. Certain braille features, octave signs and doubling, are re-marked at the beginning of a braille parallel. These have been included in the first pass at all places where they are potentially required, and flagged to be deleted where necessary during the second pass.

The program has been used to input, correct and translate to braille a sample part of a reasonably straightforward piano duet: the primo part of the second movement of the Sonata in D (K.381) by Mozart. The braille version of this sample was distributed with a questionnaire and request for comments and criticism to about 40 blind musicians, and a number of schools and organisations for the blind. Replies have been received from most of the recipients, and most of those who have replied have expressed an ability and willingness to help in the further evaluation of this project.

The braille transcription distributed contained a number of errors and omissions, some known at the time it was distributed and others revealed by the musicians' comments. These fall into three categories: features which were not incorporated into the translation algorithm at the time the sample was produced, minor programming errors in the translation algorithm, and minor discrepancies between the braille music code as defined in the manual (ref. 9) and that in current use. Where the manual is not clear on particular points or conflicts with current usage, de Garmo's Introduction to Braille Music Transcription (ref. 11) has been used as a reference to determine the correct braille translation. The program has since been corrected and extended to produce an almost accurate transcription of the sample piece of music, as compared with that produced manually by a transcriber of the Royal National Institute for the Blind (RNIB), who has kindly provided a correct braille version of part of the piece of music in question.

Problems encountered so far in translation have arisen particularly from the various braille abbreviation devices which do not occur in the inkprint. Since the translation is required to be fully automatic there can be no assistance with these at the input stage. The translation algorithm must detect, for example, repetition of beats or part-beats within a bar, whether these actually save any space in the braille, repetition of whole bars or passages, whether one part is played in unison with another, where doubling should be used, where simple short slurs or long slurs or bracket slurs should be used. These features require that neither the input nor the output of the translation stage can be strictly sequential. It is necessary to examine previously translated bars to determine whether a bar currently under consideration is a repeat of an earlier bar. It is sometimes necessary to insert braille cells before others which have already been output: for example, at the end of a passage where the left hand is played an octave below the right hand, it is necessary to go back to the previous bar to mark this.

Tests for repetitions involve more than a direct comparison of inkprint representation: for example, in a repeated bar, an expression mark may still be in effect and therefore not re-marked in the print, or a repeated beat within a bar may contain notes where accidentals or fingering are not re-marked.

Further problems arise where the order of the braille does not quite follow the order of the print: thus "p dolce" in the sample referred to above becomes "dolce p" in the braille, according to the rule that signs of wider application should come first. It is in matters such as this that it is desirable to obtain the opinion of typical braille music readers as to whether slight deviations from the strict braille definition are acceptable.

Future developments include translation of a wider variety of types of music and more complex notation than has been so far tackled. Braille versions of the four separate voice parts of Mozart's Requiem Mass and the Associated Board of the Royal Schools of Music 1977 Grade V Pianoforte Examinations have been obtained; an attempt will be made to reproduce these as accurately as possible from the inkprint scores using the automatic translation program. Vocal works will present additional problems in that the words (if in English) are to be transcribed into grade two braille, and as in the music itself, use of repeat signs is common for repeated words and phrases. Extra slurs are also required in the music to indicate the correspondence between notes and syllables where this would not otherwise be clear. Single-line non-keyboard instrumental music in braille is divided into segments, the length of which may vary within limits so that the segmentation reflects the natural structure and phrasing of the music. There does not seem to be any simple way of determining automatically where the division should be made.

References

1. Computer-assisted Translation of Braille Music: Progress Reports, May 1971 to August 1975; American Printing House for the Blind, Louisville, Kentucky.

2. SAMBA and RUMBA: Systems for Computer-assisted Translation of Braille Music, W. Watkins and J. Siems; Braille Automation Newsletter, August 1976.

3. Computer-assisted Transcription of Braille Music, Sally Wilkinson; Braille Automation Newsletter, August 1976.

4. Computer Printing of Braille Music Using the IML-MIR System, P. Howard Patrick and Patricia Friedman; Computers and the Humanities, Vol. 9, pp 115-121, May 1975.

5. Computers and Music Braille, P. Howard Patrick and Rosalind E. Patrick; Braille Automation Newsletter, August 1976.

6. An Introduction to Computer Printing of Braille Music Using the IML-MIR (Intermediary Music Language - Music Information Retrieval) System, P. Howard Patrick, Music Department, The American University, December 1976.

7. Several papers in: Musicology and the Computer: Three Symposia, edited by Barry S. Brook; City University of New York Press, 1970.

8. The Ford-Columbia Input Language, Stefan Bauer-Mengelberg; in Musicology and the Computer.

9. Revised International Manual of Braille Music Notation 1956, Part 1, Western Music, compiled by H.V. Spanner; World Council for the Welfare of the Blind.

10. Revised International Manual of Braille Music Notation 1956, 1975 American Addendum; American Printing House for the Blind, Louisville, Kentucky, 1975.

11. Introduction to Braille Music Transcription, Mary Turner de Garmo; Division for the Blind and Physically Handicapped, Library of Congress, Washington, 1974.

Acknowledgements

This project is funded by the Science Research Council. Computing facilities are made available by SRC, and other facilities by the University of Warwick.

Braille Books from Compositors' Tapes

C. Brösamle

This is a report on computer-assisted production of braille books from compositiors' tapes. The procedure has been developed within the framework of the research project "Rationalisation of the Printing of Braille Books" at the Stiftung Rehabilitation (Rehabilitation Foundation), Heidelberg, West Germany (Ref. 1).

Summary

With the aid of a programme system, compositiors' tapes can be prepared for use as input for the University of Munster's braille translation programme. The texts are re-coded, the control signs for the type-setting system are removed, and new ones for the translation and layout runs are provided. Certain steps in the preparation procedure which cannot be included in this system necessitate a certain amount of manual work in a dialogue at the monitoring display. After translation of the prepared texts, the braille texts are recorded onto compositors' tapes, which, for example, may be used as input for a stereo-typer. This procedure is contrasted with the manual copying of black print books, with particular attention being paid to the question of time requirements.

1. Compositors' Tapes in Book Printing

A large percentage of contemporary literature is prepared for printing by means of paper tape, cassettes or similar. In using compositors' tapes as output medium for braille books, one encounters the disadvantage that they generally contain mistakes. Corrections are made later, frequently directly in the texts, and are therefore absent from the tapes. The raw material includes control codes for the type-setting computer in question for the setting of the various type faces, special characters, and letters from foreign alphabets. Other control signs

indicate the formal layout of the text.

2. Preparation of the Compositors' Tapes

The points mentioned in 1 and the fact that there are various type-setting systems with different codes and control signs mean that a two-phase preparation of the text is required:

The first phase is carried out by a programme which deals with all aspects not concerned with content, and with all alterations specific to the type-setting system, e.g.:

- Re-coding
- Marking of capital letter sequences (Roman numerals, abbreviations)
- Marking of italic and boldface passages
  Marking of special characters and letters from foreign alphabets
- Conversion of the control code into an easily readable form, useful for easy location of parts of the text where manual intervention is necessary, e.g. footnotes, passages requiring special layout.

The second phase comprises proof-reading of a completed transcription and the revision of the text at the monitoring display.

The proof reader marks mistakes, or even missing parts of the text, and determines how special parts of the text are to be rendered in braille. This is necessary, as braille is not so versatile as black print as far as layout is concerned.

At the terminal the following are carried out:

- Correction of the text, insertion of missing parts

- Transformation of marked characters into a transcriptable form
- Adaptation of footnotes
- Marking of parts of text that are to be printed in braille shorthand
- Insertion of simple tables and formulae, if necessary in direct notation; "135" appears as braille characters 1, 3 and 5
- Adaptation of italic and boldface passages. Only the most important passages should be marked in this way, as too many special characters impede the smooth reading of the braille text.

A series of auxiliary routines assist in the preparation of a text at the monitoring display in such a way, that repeatedly occuring and for a particular text specific alterations can be carried out automatically rather than "by hand", i.e. manually, after appropriate adjustment of the routine. These may be started and controlled from the terminal, and the dialogue phase can be considerably reduced in this way.

The length of the manual adaptation phase is to a large extent determined by the quality requirements for the braille text. If certain flaws are tolerated in the structure of the text, and possibly certain mistakes (perhaps individual foreign words in grade 2 instead of grade 1), then more of the steps involved in production may be carried out automatically. Here a compromise between the quality of the braille text and the time needed for its production must obviously be made.

Following the phase at the computer terminal, the text is translated into braille grade 2 using the Munster translation programme (Prof. H. Werner), and the layout is determined. For output, paper tapes for controlling stereo-typers, magnetic tape (e.g. for archiving), and IBM 1403 high-speed printers with braille embossing option are available.

3. Some Problems

Although the dialogue phase at the monitoring display - and therefore manual intervention - have a firm place in this procedure, not all the problems of transcription into braille are solved thereby.

(a) Footnotes must appear either in the text or at the end of the chapter, since they cannot be placed automatically at the foot of each appropriate page in the text.

(b) Page references in the text can only be transformed into the corresponding reference in the braille text once the translation has been made. A way round this problem is to substitute chapter references, which in any case remain unaltered.

(c) The list of contents cannot be produced until formatting has been completed and the braille page numbers have been determined.

(d) Tables, formulae, etc. are also problematic. It is very time-consuming to prepare them in the black print text at the monitoring display so that they can be automatically translated into perfect braille by the translation programme. It would certainly be simpler to transcribe them, together with the list of contents, directly on paper tape, at the text editing machine for braille and insert them into the text which has been translated by computer. Experiments on these lines are planned.

4. The Time Needed for Preparation

Within the framework of the project, we have transcribed six works of approximately 200 pages - some 0.5 million characters each, including control signs, - (all references to black print text) into braille. On average

the following length of time was taken:

Proof reading	1.5 days
Dialogue at the monitoring display	1.5 days

In addition, time for input of paper tape, carrying out of phase 1, translation, printing, etc. must be taken into account. For these tasks, we are assisted by the personnel of the computer centre.

Comparing the amount of time needed for computer input using compositor's tape with that needed for typing, proof-reading and editing the whole text on a terminal the above mentioned 3 days must be related to approximately 5.5 day as figured in J.M. Gill, "The use of Digitally Stored Text of Braille Production" (Braille Automation Newsletter, August 1976), where we found in estimations of 44 hours needed for 100,000 words, which corresponds to approximately 0.5 million characters in 5.5 days. This is also confirmed by reports from our own typists. With the second method one additional day is required for preparation of text e.g., insertion of control signs.

Complicated texts require longer for their preparation whatever method of input is used. This comparison shows that the use of compositors' tapes as raw material for braille books makes a worthwhile contribution to their preparation for printing, even taking into account the fact that a more highly qualified personnel is necessary than in cases where only typing is required.

5. Choice of Books

A great deal of thought should go into the selection of books. While titles should of course be chosen which appeal to the blind reader, the paper tapes at the printer's are mostly thrown away, so that it is only possible to obtain them during the actual printing of the book.

Therefore, paper tapes must be collected "on speculation" so that they are available if required. This leads to the problem of archiving. The problem of (unintentional) censoring should also not be underestimated, since there is certainly only a very small proportion of literature available that is suitable for publication for the blind - and particularly "off beat" books are out of the question. In this instance, readers and braille publishers must work in close co-operation in order to produce a fair and reasonable supply of braille literature.

6. Conclusion

It is planned to transcribe more books into braille in a 1 year major experiment. Attention will be given to the choice of books, the time required for production of a book, and the reactions of blind readers to those produced.

References

1. J.L. Douce: Rationalisation of Braille Book Printing. Braille Automation Newsletter, August 1976.

2. C. Brösamle, U. Lehmann: Braille Books from Compositors' Tapes (Braille-Bücher aus Druckerei-Datenträgern). Heidelberg, 1976, Stiftung Rehabilitation.

3. G.M. Grunwald: Prospects for Utilisation of Compositors' Tape in the Production of Braille. Argonne National Library, 1970.

A Note on Hybrid Braille Production

P.W.F. Coleman

Abstract

This note reviews the possible types of braille production techniques, and then postulates a means for optimising the current technology at any point in time.

Introduction

By a Hybrid Braille Production System I mean a (hopefully optimal) combination of purely manual, mechanical or electronic devices and techniques in a braille production system. By Braille Production System I mean any method of producing braille documents, particularly in quantity.

There is a spectrum of such systems: one end is represented by the braille writing frame (slate), backed up by hand editing, correction, printing (in manual presses), collation, binding and distribution; the other by a system where print documents are electronically scanned, translated to braille by digital computer, corrected using a computer editor, and either sent over telephone lines to the blind user or retrieved by him from a data base, in either case being read using an electromechanical or electronic braille display.

A subdivision of electronic devices is programmable devices - digital computers of all sizes and types. And therefore one component of this technology is the program, including editors and formatters, and in particular the braille translation program.

The first braille Bible was at the bottom end of the spectrum: each dot was separately punched into brass plates using a hand metal punch; corrections were made by similarly

adding dots or by flattening them with a hammer; plates were used in a manually-operated press; collation and binding were manual, and distribution as near so as makes no difference. The National Library for the Blind in Britain even eliminated the manual press, and during a recent postal strike used hand-to-hand delivery of books - but by then they used mechanical braillers and binders.

The Thesis

Much of the above may have had a very familiar ring to many readers: dots are still hammered out or put in by hand; there is still manual intervention in the processes of collation and binding, to say nothing of despatch. Electronic scanning (Optical Character Recognition - OCR) is a thing of the future to most of us, while sending braille down telephone lines, accessing data bases and electronic braille displays are mere pipe dreams which the reactionary blind would not tolerate even if we could supply them.

So we are stuck with our hotchpotch of manual, mechanical and electronic devices and techniques and "any combination of the three" as they say on "Twenty Questions". What a hopeless, irretrievable mess to be sure!

Or is it? A more positive view sees braille publishers as participating in an evolving technology, which began with the manual and will end with the electronic - when the publisher may become the custodian of a data base on a compact computer facility, whence he can send his customers digital cassettes of information, or which the customer can access directly from home or office.

Meanwhile, at any stage of the way to this goal, the publisher must make the optimum use of what is available, and not be content with waiting for tomorrow: however it is my contention that making the most of today is exactly

what he is not doing, and that high among the reasons for this is lack of positive encouragement from the braille technologists themselves - even a positive discouragement. We tell them: "Tomorrow we'll have your mathematics or music translation program for you", when they are living in today, not tomorrow.

They need very real encouragement to take any step at all, for they are reactionary by nature - bound by limited incomes needing protection coupled with a lack of technological awareness (not even print publishers are the most technically aware!).

Examples

Software

Thus, for example, we have at present translation programs for literary text but not for mathematics or music. So why not, in preparing mathematics texts, input the literary text on its own for computer translation; where mathematical text occurs, this could be omitted, and a command substituted which would cause the computer to draw attention to (or flag) this point in its printout of the resulting file, giving the editor a reference number by which it knows this point; (the file, in this case, would be the braille file resulting from the translation process).

A skilled mathematics braillist could then enter the mathematics text by hand through a braille terminal, making use of each reference number to enable the computer to insert each portion of text into the correct position in the braille file.

The computer could then print down the completed document in braille for proofreading and subsequent on-line correction by that same braillist.

The point of such a system is that it makes the best use of both equipment and personnel. At present we have the wasteful position of a braille transcriber with a very special skill producing humdrum literary text which just happens to include material demanding his special knowledge.

In the system under review, non-mathematical braillists would enter the literary component of the text into the computer; skilled braillists would then spend their time proofing and correcting prepared braille (literary) texts, while the precious resource of the mathematical braillist would spend all his time either brailling mathematics or proofing and correcting it. Analogous arguments apply to music, computing and science generally.

Additionally, this would obviate the need to wait for the appropriate braille translation program before at least partially automating production, with the resulting increase in the volume of technical braille material available, and the optimal use of human and machine resources.

Hardware

At the hardware level, optimisation includes moving from card punching to direct data entry, with its additional built-in data vetting/verification and correction. It also means taking advantage immediately of any new input media and formats. It matters nothing that few publishers in your country use compositors' tapes: if just one does today, others will tomorrow, for the technologist can predict that trend. Get tooled up to take advantage of that publisher's output today, and you'll be ready for the others tomorrow. The input device (tape drive) is already available, and researchers already have the necessary preprocessing programs for reading these tapes and converting their codes and commands. What are we waiting for?

Optical Scanning

Optical character recognition is another possible technique that could be applied here and now. Kurtzweil has shown the feasibility of a device to read typescript, and a similar system for standard book fonts inputting directly to a computer would obviate the need for compositors' tape in most cases.

Where the device came across unreadable script, it could either project it on to a screen for immediate manual input (probably too wasteful), or flag it in a printout for later handling - maybe direct braille input as with mathematics as described previously. Such material might include foreign scripts (including Greek and Italic), tables and diagrams, as well as mathematics or music.

Another use of such a system would be in proofreading: the blind proofreader could have another version of the scanner similar to Kurtzweil's, which would read aloud the material while he checked the braille; like the present device, it would be switchable to spelled speech where this was required. Foreign text would, of course, still require sighted intervention, but this could well be minimal in most books.

To those who object that such a scanner would have an unacceptably high error rate, I would suggest that, apart from half a loaf being better than none, any such errors arising during original input would show themselves in proofreading as a discrepancy between the machine's spoken output and what was in the braille being proofread - I suspect it would be unlikely for the machine to make the same error at the same point during different runs, not least as two different machines would be used.

In the event of such a discrepancy, the proofreader could be provided with a check button, which would cause

(say) ten retries, from which the machine could output a majority verdict - normal computing practice.

(To further cries, I would make the point, as a braille user, that the braille publishers are not the perfectionists that they would have us and others believe; the standard of braille currently produced by one well-known "firm" leaves a lot to be desired.)

Conclusion

But in the long term this whole process of hybridisation should lead to the optimal solution, the completely electronic system. This is no mere fantasy, for already the world of print is moving inexorably towards electronic facsimile transmission and reproduction at a rate undreamed of ten years ago.

Blind people will then have potential access to huge volumes of information if they can only read it. Perhaps braille publishers should be looking to a change in role when they will become purveyors of braille character, graphic and facsimile displays. This change in role might include initiating and financing research and development of such devices, so that their customers are not caught at a disadvantage to their sighted friends.

Such devices might contain their own braille translation programs using, for example, microprocessors, enabling them to make material from normal print data bases. This innate intelligence might also be used to provide the owner with his personal information storage and retrieval system (see my paper in the next issue).

If we must believe the plea of braille publishers that they are short of funds, they must take hybrid systems seriously. We in Britain are finding it more and more difficult to recruit transcribers for even straight

literary braille, and their working life is generally all too short, as new pastures and higher pay beckon. The absence of specialist braillists is a continual headache: for many months now has the RNIB been advertising for music transcribers!

In the face of this, we must make the best use we can of them, and this implies the maximum use of all the available technology, i.e. a commitment to hybrid production systems.

The Expansion of Braille Production in Sweden

B. Hampshire and S. Becker

During the past year or so a research and development program has been in progress to expand and to improve the braille production facilities at the Synskadades Riksforbund (Swedish Federation of the Visually Handicapped).

After an initial study of the size and needs of the braille-using population, a new system has been proposed to supplement the existing traditional braille production methods. The rationale behind the new system has not just been to increase the amount of braille that can be produced by the SRF, but also to maintain a high quality of braille embossing, to improve the working environment of the manual transcribers, and to avoid any redundancies within the braille printing house, in which visually handicapped people are employed at each stage of the production.

The new system will eventually utilise two methods for encoding braille. One will use skilled braille transcribers and the other a braille translation program. This latter input route is still being evaluated.

The Manual Input System

This represented in Figure 1.

It consists of five main units - three manual encoding units, an ink print matrix printer (a braille line printer, mainly intended as part of the output system, will also be available to produce proofreading material in braille), and an editing/correcting visual display unit.

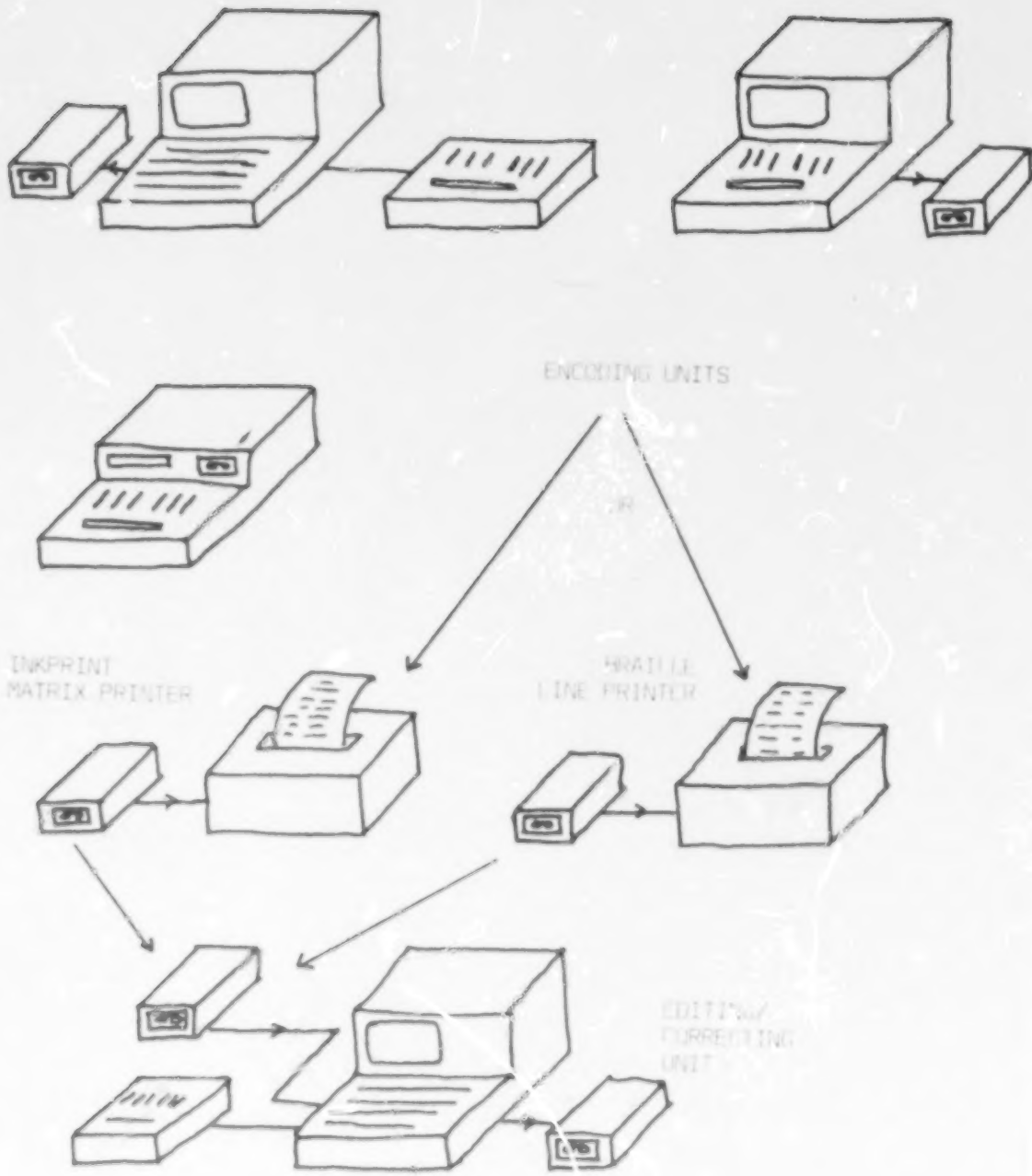

FIGURE 1: Diagram of Input System.

Manual Encoding Units for Straightforward Prose Text

For this kind of material one unit, based on a standard encoding unit, with a character display showing the last 32 characters written, will be used. Other features include keys for the deletion of last written character, word, and line; a display that will show the number of characters written on the current line, number of lines written on the current page, and the current page number. Also, it will be possible to check the last 128 characters written without deleting them. An electronic chord keyboard, based on the Perkins layout, will be used by the transcribers.

Complex and/or Specialised Text

For this kind of text, especially where complex formatting is required, encoding units with a display capable of showing up to 25 lines will be used. Furthermore, as a result of using such a visual display unit, the last 8,000 characters will be available for checking, and there will also be greater facilities for setting out and correcting text. Both these encoding units based on a visual display unit will have the chord keyboard. However, one will have a keyboard based on the standard QWERTY layout, but with extra keys so that all the braille characters can be written.

Although all three of these units have some correcting facilities, use of these will be kept to a minimum. The correction will be carried out as a separate production stage after proofreading.

Proofreading Material

From the above encoding units a data cassette coded in braille will be produced. From this cassette it will be possible to produce proofreading material either in ink print or braille. For the ink print copy there will be a matrix printer which will produce a unique ink print character corresponding to each braille character. These

same characters will be used for the displays on the encoding units. In this way an ink print format which will be precisely the same as the eventual braille format will be produced.

A braille line printer (sequential printer) will be available for producing proofreading material in braille. This will be the same printer as used at the output stage.

Editing/Correcting Unit

This unit will be based on the Hewlett Packard HP 2640 visual display unit. It will consist of, in addition to the VDU, two keyboards (one chord type, the other based on the standard layout), and two data cassette recorders - one for reading the original uncorrected cassette and the other for writing the final corrected text. The editing unit contains a micro-processor which allows "letter strings" of up to 16 characters to be searched at 500 chs/sec. and full text editing facilities. The internal memory can hold 8,000 characters (8 - 10 pages of braille).

The availability of a chord keyboard with this unit allows it to be used as an extra encoding unit for complicated text, and the QWERTY-based keyboard allows persons not familiar with the braille code to edit uncontracted braille text.

After correction the cassette can then be used in one of the output units.

All the above units will be supplied by a Stockholm based firm - Tele-ekonomi AB - who will also carry out all the necessary interfacing work.

Computerised Input System

Developments within the printing industry have been utilising computers to an increasing extent during the text preparation stage. Photo typesetting equipment controlled by mini-computers which are fed with text encoded on cassettes or other types of magnetic tape are becoming the dominant production equipment.

SRF intends to develop a computerised input system which will be able to take advantage of these texts already available on computer readable media. Such utilisation of already written texts makes this input route potentially very price competitive with the manual methods. This is less true, however, if the text must be keypunched specially for braille production.

Further investigation into these aspects of a computerised input system is ongoing. It is hoped that an initial program should be ready for testing at the end of the year. At first, developments will be carried out using a large-scale computer system at a commercial service bureau.

Output Units

Two output units will be available. One will be the standard automated Marburg stereotype machine. Although this is rather slow, its quality is proven and the existing press facilities will be continued to be utilised. This will be used for material required in multiple copies (c.a. 25 or more).

Post-Embossing Operations

Naturally, any increase in production of braille also implies an increase in gathering and stitching capacity. For this part of the system two new methods will be introduced. The first is an automated gathering, folding, and stitching machine similar to the ones currently in use at the Scottish Braille Press, Edinburgh and the

American Printing House, Louisville. Such equipment will especially improve and expand the production of braille magazines.

The other new method to be introduced is that of "spiral binding" - a method involving the insertion of a wire spiral in the back of the sheets to be bound. This method of binding is in widespread use for ordinary print books as well as in a number of braille printing houses. This binding technique is simple to carry out, relatively cheap, and allows the book to be opened out flat or even turned back-to-back without damage to the binding - a useful feature for braille books.

On-going Work

At the present time (June) detailed specifications of the equipment are being prepared. This should be completed so that ordering can take place during the Summer. Such a schedule implies that the manual input system and stereotype should be under text during the Autumn. The sequential braille printer and the automated gathering machine, however, are not likely to be in use before early 1978.

As well as the development of the centralised braille production facilities (a detailed report on this work is in preparation), some investigations into small-scale braille production and the production of raised graphic material are also in progress.

Plate Embossing Device

P.D. Gibbons and E.L. Ost

Triformation Systems Inc., is presently developing a device for embossing metal plates. Called the PED-30, the embossed metal plates are used as masters for producing thousands of copies of the brailled material.

The heart of the PED-30, the embossing mechanism, utilizes a reciprocating die and interposer blocked embossing pins to accomplish the embossing function. The power train consists of an electric motor and fly-wheel assembly connected to an electronically controlled clutch and speed reducer, turning two counter-rotating crankshafts which drive the die through pairs of connecting rods.

The metal plate transport mechanism is driven by a permanent magnet stepping motor taking multiple steps for each row of dots. Prior to insertion into the PED-30, the plate to be embossed will be clamped at one edge with an alignment bracket. This assembly is then clamped to a transport saddle riding on two horizontally positioned parallel steel rods which extend outward from the entrance of the die area. When the operator depresses the load command button, the stepping motor will advance the entire plate into the machine and through the die. While this is occuring, the die is stationary due to de-activation of the drive train clutch. When the plate has been advanced a pre-determined distance into the machine, a plate position indicator signals the control electronics to halt the plate.

Simultaneously, the power train clutch is activated and a request for data is made on the input data interface. The data source, such as an encoded tape cassette or computer, can transfer the entire page of information to be embossed into the PED-30 at a high transfer rate which, in the case of the computer, releases the data source for other transactions.

When enough data is accumulated for one line of information, the control electronics will begin looking for a timing signal from the mechanism in order to achieve synchronization of the two. When the signal is received, indicating the interposers may now be selected, the control electronics will energize the data solenoids in a pattern consistent with the configuration to be embossed. As the motion of the die continues, the zinc plate is pressed down onto the stripper plate. The stripper plate in turn is displaced downward. As the stripper plate is pressed down, the embossing pins which have had their interposers energized, will be forced to remain in position. Those which have not are free to travel downward with the stripper plate. The die continues to press the zinc plate displacing the metal and forming the dot.

As the die completes its downward travel and begins to move up, the stripper plate and zinc plate go up with it. Any embossing pins which may be inclined to stick in the plate are stripped out as they reach their upper limit of travel as the stripper plate will continue up pushing the zinc plate off the pins.

At this point another timing signal from the mechanism indicates to the control electronics that the zinc plate is free to be advanced into position for embossing the next row of dots. The stepper motor is then energized to perform that task. This cycle will continue until the page of data in memory is exhausted. At which point the control electronics will de-energise the power train clutch and advance the embossed plate out of the machine.

Designed with a standard RS232 communication interface, the control electronics utilises a read only memory to translate the input data into the desired braille configuration. This 'dot' data is then stored in a random access memory, as several passes must be made to extract the dot information in the sequence required by the mechanism, i.e. the top two dots (1 & 4) of all the cells in any given line are embossed at the same time. Then the middle two dots (2 & 5) and finally the bottom two dots

(3 & 6).

When embossing is complete on one side of the plate, it may then be inverted and embossed on the reverse side to produce up to 2560 interpoint braille characters per plate. Each line can have up to 40 characters with a maximum of 32 lines per side.

The PED-30 will have the capacity to operate at a speed of 30 characters per second and can emboss a page of information in 40 seconds. The average time to emboss an entire plate will be approximately two minutes, or about thirty plates per hour.

Braille Systems

J.E. Sullivan

Duxbury Systems offers a family of translation systems for converting text to Standard (contracted) English Braille, contracted Spanish Braille, or uncontracted braille in six languages. These translators can be used for widely varying brailling applications such as:

(i) Books and periodicals
(ii) Business memoranda
(iii) Word processing
(iv) Wire service news reporting
(v) Legal briefs
(vi) School notes and circulars
(vii) Online information retrieval
(viii) Computer aided instruction
(ix) Bank and credit account statements
(x) Sales brochures

Any size readership from single-copy to press-braille volume can be served. In essence, these translators permit typing skills or even automated input to serve where otherwise the relatively rare ability to transcribe braille would be required. Thus the capacity of high-volume producers can be increased without placing further demands on the time of skilled braillists, and, even in organisations lacking sighted persons who know braille, high-quality braille can be made as available to the blind student or worker as print is to his sighted colleagues.

Text to be translated may be generated manually or automatically. In most cases, the same procedure or device that is used to produce print - for example, typing on a standard keyboard, computer output, or composition machine tapes - can be tied directly to the translator. System options include the ability to edit the text and to control formatting and other aspects of the translation.

The complement of equipment at a user's site might include a standard keyboard-and-display terminal for text entry and system control, disk unit for inkprint and braille text storage, embossing terminal for producing the braille, and, for the translation function, either a microcomputer or access to a remote computer via telephone coupling (available on a local-call basis in more than 40 cities across North America). It is possible, by arranging for embossing at another user's site, to start with as little as a teletype or equivalent, acquiring additional local capability as volume builds. In all upgrades, including that of replacing the remote computer access by a local microcomputer, existing equipment is generally augmented, not replaced.

These translators represent a mature technology, the fruition of over seven years' experience in practical braille automation. Several large braille producers have already selected these systems for production use. For more information on how these systems can meet your needs, call or write: Joseph E. Sullivan, President, at Duxbury Systems, Inc., 123 Lowell Drive, Stow, Massachusetts 01775, USA.

Cost Estimation Guide

Prices given below are for general planning purposes only and are therefore approximate; exact prices will depend upon the total configuration, options selected, time and locale of remote service, and in some cases the brand name of components used (for example, either Data General or Digital Equipment processors can be used in the translator). Also, these estimates do not include user-related costs such as personnel, overhead, telephone, and supplies. Quotations will be furnished on request.

1. Data entry terminal - CRT(1), upper and lower case: $1300

2.	Printing terminal - u/l case, 30 & 60 chars./sec.:	$2700
3.	Floppy disk storage unit, single drive with editing and filing system, removable diskettes:	$3300
4.	Floppy diskettes, 300,000 chars. capacity, each:	$9
5.	Embossing terminal - 10 cells/sec.(2):	$6500
6.	Telephone data coupler:	$400
7.	Translation service, per original braille page(3):	$0.33
8.	Minicomputer-based translation unit, 360,000 chars. per hour capacity	$32,000
9.	Microcomputer-based translation unit, 200,000 chars. per hour capacity(4):	$24,400

Two examples:

System Components	Equipment Costs	Per-Page Costs
Items 1, 3, 5, 6	$11,500	$0.33
Items 1, 3, 5, 6, 9	$35,900	$0

Notes:

(1) cathode ray tube, i.e. video screen display

(2) Higher-speed embossers and automatic stereographs for press braille plates may also be ordered. Brailling devices costing as little as $2000 are also available.

(3) at 1000 characters per page

(4) estimated

The Duxbury Braille Translator is a program capable of very general text-to-text translation under the control of tables specifying the particulars of the translation to be performed. The program is especially suited to inkprint-to-braille text translation, and tables are available for the contraction (grade II) rules appropriate

to the official Braille code for several languages. It improves upon previous programs employing similar principles in many respects, notably: input text differs little or not at all from its usual ink print form; the table logic is more expressive, permitting even better fidelity to the braille rules; a much wider range of special formatting controls is provided. Such controls include: automatic braille page numbering; formatted ink print page number; automatic paragraphing, line breaks and tabulation; running centred titles and centred headings; columnar arrangements centred, left-aligned, right-aligned, decimal-point aligned, or mixed; poetry format; hanging indentation; adjustable margins and page length; and many variants of these.

The Translator is FORTRAN-coded and operates on any Data General NOVA or ECLIPSE or Digital Equipment 11-series computer with FORTRAN support and at least 25k words of memory (plus operating system). Conversion to other equipment is specially quoted. Typical translation speeds (English tables, approximate words per minute): NOVA 800, 1000 wpm; ECLIPSE C300, 1500 wpm; DEC 11/34, 1400 wpm; DEC 11/70, 3100 wpm.

The English (American) tables, in conjunction with the Translator, provide a translation with a very high degree of conformity to Standard English (American) rules. Because some of these rules are ambiguous or require judgments that cannot be made by a practical automatic process, perfect conformity may require annotation of input (or editing of output before actual embossing.) Full controls to force or prevent contractions are provided. However, in practice the need for such controls has been found to be minimal. The English tables have provision for grade I as well as grade II English, and grade I for Latin, Italian, French, German and Spanish text in English context.

The Spanish tables implement Spanish Braille in grades I or II (contracted).

Similar tables for French Braille, when complete, will implement French Braille in grades I or II.

The Table Preparation Program reduces tables in a human-oriented (source) form to a machine-oriented (object) form, the latter being the form directly accessed by the Translator. With this program and the table source (separately licensed), it is possible to modify the tables for special needs - e.g. to enter the correct translation of unusual proper names, or to rename formatting controls for compatibility with other systems. The program runs in the same environment as the Translator.

The Duxbury Text Editor is a line-oriented editor suitable for preparing and editing text to be translated. It runs in the same environment as the Translator, but on Data General Equipment only. Its chief advantage over the editor provided with the DGC system is that it permits multiple simultaneous editing stations to be set up; it is also much simpler for the novice to learn and use.

Braille Translation by Telephone

Duxbury Systems will make available to the customer an account suitable for general time-sharing service on a Digital Equipment 11/70 (under the RSTS/E Operating System). This account will have access to the Duxbury Braille Translator for purposes of translating ASCII-coded English or Spanish into a contracted braille equivalent code (capable of driving a suitably configured Triformations, Inc. LED series embosser or equivalent; other codes by special quotation).

Service is normally at 300 baud, implying a capacity of approximately 54 1000-cell braille pages per connect-hour. Service may be accessed by direct call to Belmont, Massachusetts or by local call in numerous cities via TELENET.

An initiation of service, manuals describing use of the translator system and related system facilities will be provided.

Storage on the host computer system is available, though storage is not normally necessary for braille translation if a local storage means is available.

DOTSYS and "DUXSYS"

In August, 1970, the world's first truly "portable" braille translation system was installed at the Learning Resources Center of the Atlanta Public Schools in Atlanta, Georgia. The software component of this installation, i.e. the translator program itself, was the fruition of many months of effort by a four-man team at the MITRE Corporation of Bedford, Massachusetts, under sub-contract to the Massachusetts Institute of Technology. This translator, called DOTSYS III, was programmed in the commonly available COBOL language and thereby had a property not found in any of the few high-quality translators that preceded it: namely, it could with relative ease be made to run on any of a large variety of computing systems, not just the one for which it was originally designed.

This quality of portability, plus its reputation for high fidelity to the English Braille (grade II) rules, led many other organisations to adopt its use. Eventually, several of these considerably advanced DOTSYS III's capabilities, and in some cases reprogrammed it in a language more efficiently implemented on their particular computing equipment.

In the latter part of 1975, two of the original MITRE team began technical planning towards a substantial revision and improvement of DOTSYS III, to take advantage of five years' experience with this type of translator and also five years' of advancement in the state of available

computer hardware. The new program was to run on a minicomputer costing far less than the previous minimum DOTSYS configuration, and was to be programmed in FORTRAN IV, a language of about the same overall availability as COBOL and considerably more popular on minicomputers.

These developments led to the founding of Duxbury Systems, Inc. in April 1976 and the first installation of the Duxbury Braille Translator in July, 1976. Because DOTSYS III is in the public domain (available from the Harvard-MIT Rehabilitation Engineering Center), the question naturally arises whether the additional cost of the Duxbury Braille Translator, which is a proprietary product, is commensurate with its advantages. We feel that it is, for the following reasons:

(i) Support for the system's programs and tables is provided by a commercial enterprise committed to its continuing maintenance and enhancement both legally and as a practical business matter. DOTSYS III does not enjoy such a base of support. Though users of DOTSYS III naturally are willing to be helpful to each other, as a practical matter their respective systems have evolved in such different directions that the problems and fixes of one system are rarely relevant to those of another system.

(ii) By comparison with DOTSYS III, the design of the Duxbury Braille Translator is much more reliable and extendable, both because the designer was deeply involved in the DOTSYS III design, implementation and evolution and therefore, learned from its mistakes as well as its successes, and because current design technology - structured design and programming, data-flow modularisation - was applied from the beginning. In this regard, it must be borne in mind that DOTSYS III was a prototype (DOTSYS II) that was incrementally modified to incorporate practically all of its present formatting features

and much of its translation ability beyond the basic finite-state algorithm. About 80-90% of the present DOTSYS III program is an addition or modification to DOTSYS II; hence it is not surprising that DOTSYS III is considered by many who have worked with it to be difficult to maintain or extend.

(iii) The Duxbury Braille Translator runs about as fast (1000 wpm) as DOTSYS in less core (about 44K bytes vs. 70K bytes) and on a much less expensive machine (NOVA class vs. IBM 360 class). On the DEC 11/70, the Duxbury Translator runs at over 3000 wpm.

(iv) Generally speaking, the Duxbury Braille Translator will accept tables usable by DOTSYS III, though some format changes are required. Because of certain added capabilities in the Duxbury Translator, however, the converse is not true in general. Thus it will be possible to incorporate the integrated experience of DOTSYS users into the Duxbury tables, but more difficult to go the other way. This consideration would of course apply even more to new table developments such as Spanish Braille (now available) or French Braille (in design).

(v) The Duxbury Translator accepts "natural"-appearing mixed-case input, automatically recognising paragraphs and, where appropriate, line endings and even table columns. DOTSYS III expects upper-case input, with true capitals flagged by a preceding special character. DOTSYS III also relies more heavily on explicit formatting commands. (Some, though not all DOTSYS installations have added preprocessors to overcome some of these deficiencies.)

(vi) Many new features have been added besides those already mentioned, among them:

(a) a second right-context character test for contraction table entries, which extends the power of the translation algorithm;

(b) separate table preprocessing, saving set-up time each run;

(c) ability to insert capitals (USA rules) or not (Canadian and British practice);

(d) variable page width and depth;

(e) page number reset control;

(f) multi-line running titles;

(g) automatic guide-dot insertion where required such as in table of contents;

(h) automatic ink print page number formatting;

(i) hanging indentation;

(j) conditional page eject;

(k) centring (as well as left-, right- and decimal-point-aligned) tabs; and

(l) variable poetry indentation.

Duxbury Systems, Inc. appreciates all inquiries regarding its principal product and would be pleased to discuss or expand any of the above points. Contact: Joseph E. Sullivan, President, at the above address.

Prices

Services

1. Telephone Translation Service

(a) Basic Costs:

Documentation and service initiation (one-time charge)	$ 50
Monthly minimum charges under (b-d)	$ 5

(b) Connect time (direct call to 617 489 exch.)

8 a.m. - 5 p.m. Eastern time	$ 14.50/hr.
Other times	$ 11.50/hr.

Access via TELENET (local call in numerous cities) - add $3.50 to $7/hr. (depending on city) to above rates

(c) Data storage at computer facility

Each block (=512 chars. or fraction) $ .90/mo.

2. General consulting $ 30/hr. + exp.
$1100/wk. + exp.

3. Courses in DS software product use $ 350/day + exp.

4. Delivery and installation of leased or purchased DS software products (any combination of products delivered at one time):

(a) Installation and demonstration at customer site $1100 + expenses (5 days max.)

(b) Transmittal on media suitable for customer installation (if feasible) $ 150 + expenses

Either option includes one year warranty.

5. Extension of warranty (provided warranty has been continually in force) $ 120/year

Note: Expenses include all costs to DS directly incurred in filling a customer order, except for DS personnel time and ordinary overhead.

Software Products

Software products are offered as a customer license to use the software on a designated computer only.

A 10% discount is applicable to the second and subsequent copy of any one software produce license ordered by a single customer.

One of the delivery and installation options in the previous section must be ordered with any combination of software products.

1. Duxbury Braille Translator
   Object license — $11925
   Must be ordered with one or more of:
   (3a), (4b) or (5b)

2. Duxbury Braille Table Preparation Program
   Object License — $ 3515
   Prerequisite: (1)
   Must be ordered with one or more of:
   (3b), (4b) or (5b)

3. English (American) Braille Tables

   (a) Object License — $ 3310
   Prerequisite: (1)

   (b) Source License — $ 3310
   Prerequisites: (1), (2) and (3a)

4. Spanish Braille Tables (see DS-D7323)

   (a) Object License — $ 3830
   Prerequisite: (1)

   (b) Source License — $ 3830
   Prerequisites: (1), (2) and (4a)

5. French Braille Tables
   (a) Object License $ 4880
   Prerequisite: (1)
   (b) Source License $ 4880
   Prerequisites: (1), (2) and (5a)

6. Duxbury Text Editor Program
   (a) Object License $ 2200
   Prerequisite: (1)
   (b) Source License $ 3000
   Prerequisites: (1), (6a)

Hardware and Complete Systems

DS does not presently manufacture hardware of any kind. Accordingly, the hardware (and manufacturer-supplied software) prices listed herein are not controlled by DS and, though based upon information available to DS at the time of compilation, cannot be guaranteed. DS will assist the customer in custom configuration design, if required, at its regular consulting rates. DS will also assume hardware ordering and multi-vendor integration responsibility at no extra charge for Data General, Digital Equipment, and Triformation, components, and for a fee of 10% of list for other components.

Typically, hardware prices exclude user-related costs such as delivery, installation, supplies, site preparation and maintenance beyond any warranty offered. Maintenance can be estimated at 1% of purchase cost per month.

Estimates of capacity are approximate. A braille page is assumed to be 1000 cells in size for estimating purposes.

Alternative embossing means such as automatic stereographs or alternative text entry means such as compositor's tape may be added to all systems.

1. Data Entry and Embossing Station for use with telephone service

Lear-Siegler ADM-3 CRT terminal, u/l case	$ 1300
Sykes COMM-STOR single diskette system, filing and editing capability	$ 2865
Triformation LED-1 10 cells/sec. embossing terminal	$ 6500
Telephone data coupler (many brands)	$ 350 approx.
Total	$11015

Translation capacity: 54 braille pages/hr.
Embossing capacity: 36 braille pages/hr.
For applications involving fewer than 1200 braille pages per month to be translated, this station in conjunction with telephone translation service offers an economical alternative to computer purchase. Approximately $1900 can be saved from the above price, at the expense of flexibility and ease of text editing, by substituting the following unit for the single diskette system:

Techtran 815 single cassette tape drive	$ 950

2. Data General MicroNOVA-based complete text entry and braille translation system

Lear-Siegler ADM-3 CRT terminal, u/l case	$ 1300
MicroNOVA computer	$12465
32K words (64K bytes) memory	
dual diskette drive	
disk operating system and editor	
numerous features	
DS Braille Translator object license	$11925
DS English Tables, object license	$ 3310
Triformation LED-1 10 cells/sec. embossing terminal	$ 6500
Embosser interface	$ 250
Total	$35750

Translation capacity: 200 braille pages/hr.
Embossing capacity: 36 braille pages/hr.
This system offers complete in-house text preparation, translation and embossing capability. Ten

"slots" remain available in the computer for additional devices.

3. Expanded Data General-based systems
The preceding basic system may be augmented in any or all of the following ways, depending on user need:

(a) Printing terminal in place of CRT — $ 1150 add'l
Substitutes 60 cps DGC DASHER for ADM-3; permits hard copy of text, computer instructions, etc.

(b) High-speed embosser — $ 7000 add'l
Substitutes LED-120 for LED-1; raises embossing capacity to 423 braille pages/hr.

(c) Larger, faster computer — $ 3055 add'l
Substitutes NOVA 3/12 for MicroNOVA; raises translation rate to 360 braille pgs./hr., thereby leaving more machine time for text entry and editing, and also offering a more expandable and flexible computer for other purposes.

(d) With Duxbury Editor object license — $ 2200 add'l
Permits simpler editing and, with addition of more terminals, multiple editing stations.

4. Digital Equipment DEC 11/34-based complete system

DEC 11/34 computer and terminals — $61100
- 48K words (96K bytes) memory
- multiplex channel
- dual RK05 (2.5M bytes each) disks
- 4 CRT terminals (expandable)
- 1 hardcopy terminal (expandable)
- multi-tasking operating system
- numerous features

DS Braille Translator object license — $11925

DS Table Preparation Program object license	$ 3515
DS English Tables, object license	$ 3310
DS English Tables, source license	$ 3310
Triformation LED 120 embosser	$13500
Total	$96660

Translation capacity: 490 braille pgs./hr.
Embossing capacity: 432 braille pgs./hr.
This configuration is suitable for large-scale braille production; it permits text to be entered by up to 5 persons concurrently with translation or embossing operations. Memory, terminals, embossers, or other devices such as magnetic tapes, paper tapes, very large disks, automatic stereographs, optical character readers, etc., can be added.

An Analysis of Braille Contractions

J.M. Gill and J.B. Humphreys
Warwick Research Unit for the Blind

Introduction

Grade 2 English braille uses 190 contractions in order to save space and reduce the time taken in reading and writing. From time to time studies have been proposed which investigate whether the contraction system is optimal for space saving, speed of reading and writing, and for ease of learning by both children and adults. The first step, in any such study, is an analysis of the frequency of the present use of contractions.

A survey was undertaken by Lockhead and Lorimer (1954) which analysed half a million words. This study was extremely time-consuming since the whole text was manually analysed and the occurance of each contraction noted by a group of skilled braille transcribers. However computers offer a fast method of statistically analysing data which is already in digital form.

Kederis, Siems and Haynes (1965) used a computer to analyse 291,000 words for American grade 2 braille. The sample was taken from books (mainly fiction) of which over 60% were for children; numbers accounted for less than 0.1% of the input characters. They found that contracted braille used 26.5% fewer characters than the ink print for their sample text.

Method

A computer program was modified to automatically analyse the frequency of use of braille contractions. The analysis program used 13k words of store and processed text at 7468 words per minute. The data used in this study was documents requested by blind individuals as part of

an evaluation of a computer-based braille production system (Gill and Humphreys, 1976). The data consisted of 1,073,339 words which can be considered typical of those used in short documents but not of literature in general.

The computer program has been designed to be capable of analysing the effects of any proposed changes to the rules of contracted braille. This facility will be essential to assist those studying the revision of the braille code.

Results

Table 1 shows the frequency of use of contractions in order of space saved over uncontracted braille. The total number of spaces saved over uncontracted braille is the product of the total number of occurences and the number of cells saved. The cumulative percentage of space saved is the running total of the number of spaces saved divided by the total number of spaces saved expressed as a percentage.

The entry in the table marked SPACE refers to the space omitted between certain contractions (AND THE); this entry is not present in previous studies of the braille contraction system.

The use of a system of contractions saved 1,257,640 braille cells for the test data of 1,073,339 words. The first 13 contractions account for over 50% of the space saving, and the first 36 contractions for over 75%. The last 11 contractions occur, in total, only 38 times in over one million words.

The contractions AND, FOR, OF, THE, WITH account for 23% of the space saving but all the 23 simple upper word-signs together only account for 8.2%.

Table 1 The frequency of contractions in order of space saved over uncontracted braille. An asterisk indicates a single cell contraction.

		Contraction	Total number of occurences	Total number of spaces saved over un-contracted braille	Cumulative percentage of space saved
1	*	THE	69028	138056	10.98
2	*	AND	31810	63620	16.04
3	*	ING	28452	56904	20.56
4	*	ER	52968	52968	24.77
5	*	IN	50238	50238	28.77
6	*	TO	23833	47666	32.56
7	*	OF	36767	36767	35.48
8	*	EN	36232	36232	38.36
9	*	ED	35857	35857	41.21
10		ATION	11760	35280	44.02
11	*	ST	33134	33134	46.65
12	*	FOR	15556	31112	49.13
13	*	AR	29164	29164	51.45
14	*	THAT	6644	19932	53.03
15	*	WITH	6624	19872	54.61
16	*	EA	17628	17628	56.01
17	*	CH	17189	17189	57.38
18		TION	8584	17168	58.74
19	*	CON	8378	16756	60.08
20		MENT	8081	16162	61.36
21	*	OU	13829	13829	62.46
22	*	WHICH	3395	13580	63.54
23	*	COM	6693	13386	64.61
24	*	THIS	4363	13089	65.65
25		(SPACE)	13067	13067	66.68
26	*	FROM	4131	12393	67.67
27	*	TH	12064	12064	68.63
28	*	BLE	5738	11476	69.54
29	*	BY	5589	11178	70.43
30	*	OW	10361	10361	71.25
31	*	SH	9187	9187	71.99

32	*	BE	9078	9078	72.71
33	*	HAVE	2965	8895	73.41
34	*	WILL	2880	8640	74.10
35		SHOULD	1994	7976	74.74
36	*	WAS	3768	7536	75.33
37	*	YOU	3672	7344	75.92
38	*	NOT	3555	7110	76.48
39		PART	3424	6848	77.03
40		THERE	2243	6729	77.56
41		SION	3348	6696	78.10
42		WORK	3331	6662	78.63
43	*	WH	6600	6600	79.15
44	*	DIS	3248	6496	79.67
45		ANCE	3243	6486	80.18
46		BLIND	2086	6258	80.68
47	*	SHALL	1518	6072	81.16
48		THEIR	1901	5703	81.62
49		WOULD	1817	5451	82.05
50		ENCE	2725	5450	82.48
51	*	PEOPLE	1062	5310	82.91
52	*	IT	5274	5274	83.33
53	*	AS	5215	5215	83.74
54		ALLY	2411	4822	84.12
55	*	WERE	1535	4605	84.49
56		UNDER	1516	4548	84.85
57		CHILDREN	752	4512	85.21
58		TIME	2196	4392	85.56
59	*	HIS	2124	4248	85.90
60		THESE	1409	4227	86.23
61		ONE	4080	4080	86.56
62		ITY	4062	4062	86.88
63	*	BUT	2029	4058	87.20
64	*	MORE	1268	3804	87.51
65		INTO	1249	3747	87.80
66	*	GH	3693	3693	88.10
67		YOUR	1832	3664	88.39
68		QUESTION	595	3570	88.67
69		ABOUT	1145	3435	88.95
70		BETWEEN	686	3430	89.22

71	THROUGH	671	3355	89.48
72	OUND	1653	3306	89.75
73 *	CAN	1618	3236	90.00
74	BEFORE	800	3200	90.26
75	SOME	1598	3196	90.51
76	OUNT	1570	3140	90.76
77	SUCH	1502	3004	91.00
78	WHERE	992	2976	91.24
79	FIRST	945	2835	91.46
80	RIGHT	924	2772	91.68
81	EVER	1378	2756	91.90
82	COULD	837	2511	92.10
83	BRAILLE	619	2476	92.30
84	AFTER	824	2472	92.50
85	NECESSARY	412	2472	92.69
86 *	VERY	819	2457	92.89
87 *	CC	2456	2456	93.08
88	DAY	2339	2339	93.27
89 *	OUT	1150	2300	93.45
90 *	FF	2252	2252	93.63
91	BECAUSE	446	2230	93.81
92	NESS	1102	2204	93.98
93	RECEIVE	551	2204	94.16
94	LETTER	512	2048	94.32
95	HAD	2040	2040	94.48
96	CHARACTER	285	1995	94.64
97	ALSO	996	1992	94.80
98	THOSE	610	1830	94.95
99	LITTLE	456	1824	95.09
100 *	EVERY	449	1796	95.24
101	ONG	1716	1716	95.37
102	MUST	835	1670	95.50
103 *	LIKE	556	1668	95.64
104	MANY	801	1602	95.76
105	GOOD	792	1584	95.89
106	AGAINST	369	1476	96.01
107	TOGETHER	279	1395	96.12
108	OUGHT	454	1362	96.23
109 *	STILL	339	1356	96.33
110 *	DO	1301	1301	96.44
111	EITHER	316	1264	96.54

112	*	SO	1243	1243	96.64
113		KNOW	614	1228	96.74
114		IMMEDIATE	201	1206	96.83
115	*	DO	1187	1187	96.93
116	*	KNOWLEDGE	146	1168	97.02
117		FRIEND	270	1080	97.10
118	*	RATHER	213	1065	97.19
119		ACCORDING	150	1050	97.27
120		GREAT	522	1044	97.36
121		NAME	521	1042	97.44
122		MUCH	512	1024	97.52
123		WORD	510	1020	97.60
124		ALTHOUGH	203	1015	97.68
125	*	JUST	335	1005	97.76
126		FUL	1004	1004	97.84
127		THEMSELVES	166	996	97.92
128		WORLD	328	984	98.00
129		SAID	491	982	98.08
130		ITS	963	963	98.15
131		YOUNG	321	963	98.23
132		AGAIN	314	942	98.30
133		CANNOT	228	912	98.38
134		LESS	441	882	98.45
135		ALWAYS	290	870	98.52
136		HERE	421	842	98.58
137		ALREADY	210	840	98.65
138	*	CHILD	203	812	98.71
139		PAID	387	774	98.78
140		UPON	382	764	98.84
141	*	GG	760	760	98.90
142		HIM	753	753	98.96
143		MOTHER	188	752	99.02
144		ABOVE	369	738	99.08
145		HIMSELF	180	720	99.13
146	*	QUITE	160	640	99.18
147		PERHAPS	152	608	99.23
148		FATHER	149	596	99.28
149		LORD	282	564	99.32
150	*	ENOUGH	110	550	99.37
151		BELOW	164	492	99.41

152	ITSELF	121	484	99.45
153	BEHIND	117	468	99.48
154	QUICK	152	456	99.52
155	TODAY	135	405	99.55
156	WHOSE	132	396	99.58
157	ACROSS	129	387	99.61
158 *	GO	387	387	99.64
159 *	BB	352	352	99.67
160 *	US	352	352	99.70
161	ALMOST	117	351	99.73
162	AFTERNOON	55	330	99.75
163	RECEIVING	62	310	99.78
164	SPIRIT	77	308	99.80
165	YOURSELF	61	305	99.83
166	TOMORROW	39	234	99.85
167	BEYOND	57	228	99.86
168	DECLARE	53	212	99.88
169	NEITHER	48	192	99.90
170	O'CLOCK	46	184	99.91
171	AFTERWARD	25	150	99.92
172	MYSELF	50	150	99.94
173	HERSELF	36	144	99.95
174	ALTOGETHER	20	140	99.96
175	BESIDE	25	100	99.97
176	BENEATH	17	85	99.97
177	OURSELVES	14	70	99.98
178	CONCEIVE	11	55	99.98
179	TONIGHT	10	50	99.99
180	DECLARING	7	35	99.99
181	DECEIVE	8	32	99.99
182	REJOICE	7	28	99.99
183	PERCEIVE	6	24	100.00
184	YOURSELVES	3	18	100.00
185	ONESELF	4	16	100.00
186	THYSELF	2	8	100.00
187	PERCEIVING	1	5	100.00
188	CONCEIVING	0	0	100.00
189	DECEIVING	0	0	100.00
190	REJOICING	0	0	100.00

Conclusions

This study did not include speed of reading or ease of learning contracted braille so the data should not be used as the sole basis for modifying the braille system. However from this data it is clear that the present system is not optimum for space saving. This study has clearly demonstrated the viability of using a computer to assist in analysis, and indicates the potential of such a program for assisting in studies of the braille code.

References

Gill J.M. and Humphreys J.B. "A Feasibility Study on a Braille Transcription Service for Short Documents" Braille Automation Newsletter, August 1976, pp 19-24.

Kederis C.J., Siems J.R. and Haynes R.L. "A Frequency Count of the Symbology of English Braille Grade 2, American Usage" The Education of the Blind, Dec. 1965, pp 38-46.

Lockhead H.M. and Lorimer J. "Report of the Survey of the Frequency of All the Contractions of Standard English Braille Grade Two" Scottish Braille Press, 1954, 49 pp.

Using Redundancy for the Syntactic Analysis of Natural Language

Application to the Automatic Correction of French Text

J. Courtin

The first part of the paper outlines the structure of the P.I.A.F. System (Programme Interactif d'Analyse du Francais) which is composed of:

(i) A system containing a general finite state transducer

(ii) A system for syntactic analysis

The finite state transducer has numerous applications, in particular morphological analysis. It uses:

(i) A set of grammatical rules

(ii) A set of models, each of which is associated with a set of rules

(iii) A dictionary, each element of which reference one model.

By means of an interactive editor "PIAFEDIT", the user can write, modify, and exploit the components of the transducer.

The system for syntactic analysis is composed of two modules:

(i) A dependency system, based on an algorithm described at the PISA Conference, is used as a "relationned filter" and gives one or several interpretable structures.

(ii) A contex-free system, used as a grammatical filter, permits the validation of the structures obtained via dependency.

These two modules are independent and can be activated in parallel (to accelerate the analysis) or in series, as is the case of the detector of orthographic errors "PIAFDET".

The second part of the paper describes one of many possible applications of the P.I.A.F. system which has been programmed in our laboratory: an automatic corrector of written text "PIAFCOR" based on:

(a) Automatic detection of lexical and syntactic errors (by "PIAFEDIT" and "PIAFDET").

(b) Automatic correction of erroneous graphemes realised by:

(i) the use of the general transducer as a translator "grapheme-phoneme" furnishing all possible graphemes having the same pronunciation as the initial erroneous grapheme.

(ii) These graphemes are controlled by the syntactic analyser using the two modules in parallel.

Finally, an example is given of a session at a terminal, illustrating various possibilities and conversational facilities of the P.I.A.F. system.

TOBIA

On 26th May, 1977, the Centre for Transcription par Ordinateur en Braille Integral et Abrege (TOBIA) was established at the Paul Sabatier University in Toulouse, France. The centre aims to provide braille material for students, blind schools and braille libraries, as well as undertaking research projects concerning braille.

The present team consists of four people:

Mlle. M. Truquet (leader)

J. Frontin (computer-assisted translation of music into braille)

Mlle. D. Levy (computer-assisted translation of mathematics into braille)

Mlle. Vidal (typist)

The Centre is run by a management committee and has a mandate for 5 years.

Congress in Toronto

At the Quinquennial Congress of Information Processors (August 4-8 in Toronto, Canada), members of Visually Impaired Data Processor International are planning to demonstrate how visually impaired and blind people can program computers and perform related tasks such as tending inquiry terminals, and how positions in the Internal Revenue Service and Social Security Administration can be handled.

Recent Publications and Reports

"Braille System will Help Double RNIB Reading Matter".

Computer Weekely, 12 May 1977, p. 3.

The new RNIB computer-based system for braille production will be based on two minicomputers and situated in a new printing works in North London.

"Computer Braille Arrives"

CNIB National News of the Blind, Vol. 37, No. 1, Summer 1976, pp 4 & 7.

Briefly describes the Canadian National Institute for the Blind's new computer-based system for braille production.

Gill J.M. "Psychological Abstracts in Braille: A Preliminary Report".

Warwick Research Unit for the Blind, November 1976, 6 pp.

A small-scale evaluation of a system for automatically producing selective listings of abstracts for blind psychologists. The pilot scheme involves production of over a million braille cells per month.

Grunwald A.P. and Biesemeier P.J. "Testing Argonne's Braille Machine".

Argonne National Laboratory, 9700 South Cass Avenue, Argonne, Illinois 60439, USA, 1977.

A small-scale evaluation by the developers of a braille reading system which involves storing the braille digitally on magnetic tape. To read the tape, the braille is embossed on an endless belt which circulates under the reader's fingertips.

"International Guide to Aids and Appliances for Blind and Visually Impaired Persons".

American Foundation for the Blind, 15 West 16th Street, New York, New York 10011, USA, 1977, 256 pages, price $3.

This is the second edition of the International Catalog and is more comprehensive than the first edition. More than 1500 devices of 270 distributors in 28 countries are listed; these are only those aids and appliances that are claimed to be in serial production. This should prove to be an invaluable reference book.

Schauder D.E. and Cram M.D. "Libraries for the Blind - An International Study of Policies and Practices".

Peter Peregrinus Ltd., England, 1977, ISBN 0 901223 91 3, 152 pages, price £10.35.

This book, which is based primarily on research done in 1971 and 1972, reviews the history of braille and talking book libraries for the blind in developed countries. It also covers financial and administrative responsibility, selection, production and acquisition of materials, organisation, printed catalogues and personnel. Many sections of the book seem to be from publicity handouts put out by the organisations for the blind, and there does not seem to have been any attempt to verify this information.

Address List

1. Andersson L.
   Projekt ab Alea, Henriksbergsvagen 104, S-136 67 Handen, Sweden.

2. Bagley P.R.
   Information Engineering, 3401 Market Street, Philadelphia, Pennsylvania 19104, USA.

3. Beatty Prof. K.O.
   Chemical Engineering Department, North Carolina State University, Raleigh, North Carolina 27607, USA.

4. Beck Mrs. J.M.
   Volunteer Services for the Blind, 919 Walnut Street, Philadelphia, Pennsylvania 19107, USA.

5. Benham T.
   Science for the Blind Products, 221 Rock Hill Road, Bala Cynwyd, Pennsylvania 19004, USA.

6. Berkowitz Dr. M.
   R.T.D.D., American Foundation for the Blind, 15 West 16th Street, New York, New York 10011 USA.

7. Biesemeier Ms. P.
   Argonne National Laboratory, 9700 South Cass Avenue, Argonne, Illinois 60439, USA.

8. Boldt Prof. Dr. W.
   Padagogische Hochschule Ruhr, D 46 Dortmund, Londemannstr. 84, West Germany.

9. Bonder H.
   P.O. Box 1075, Enschede, The Netherlands.

10. Boyles Dr. M.P.
    Atlanta Public Schools, 210 Pryor Street, Atlanta, Georgia 30303, USA.

11. Brown D.
    Canadian National Institute for the Blind, Computer Centre, 1929 Bayview Avenue, Toronto, Ontario, Canada.

12. Brown L.
    14 Baylor Avenue, Westboro, Massachusetts 01581, USA.

13. Brown V.
    Teletype Corporation, Little Rock, Arkansas, USA.

14. Cargill F.R.
    Board of Vocational Education and Rehabilitation, St. of Illinois, 623 East Adams Street, Springfield, Illinois 62706, USA.

15. Chabarkapa M.
Savez Slepih Jugoslavije, P.O. Box 807, Beograd, Ustanicka 25-11, Yugoslavia.

16. Charpentier J.M.
L.R.R.P.H., Conservatoire National des Arts et Metiers, 292 rue Saint Martin, 75141 Paris Cedex 03, France.

17. Clark L.L.
R.T.D.D., American Foundation for the Blind, 15 West 16th Street, New York, New York 10011, USA.

18. Coleman P.W.F.
Computer Unit, University of Warwick, Coventry CV4 7AL, England.

19. Curry Prof. S.M.
Department of Physics, University of Texas at Dallas, P.O. Box 688, MS #Fo2.3, Richardson, Texas 75080, USA.

20. Dalrymple G.F.
Sensory Aids Evaluation and Development Center, Building 31-063, 77 Massachusetts Avenue, M.I.T., Cambridge, Massachusetts 02139, USA.

21. Dorf Ms. M.
Division for the Blind and Physically Handicapped, Library of Congress, 1291 Taylor Street N.W., Washington D.C. 20542, USA.

22. Douce Prof. J.L.
Warwick Research Unit for the Blind, University of Warwick, Coventry CV4 7AL, England.

23. Dowling Dr. J.
Worcester Polytechnic Institute, Worcester Road, Worcester, Massachusetts 01609, USA.

24. Droege M.F.
Clovernook Home and School for the Blind, 7000 Hamilton Avenue, Cincinnati, Ohio 45231, USA.

25. Duran P.
Protestant Guild for the Blind, 456 Belmont Street, Watertown, Massachusetts 02172, USA.

26. Ekberg Prof. S.
Department of Telecommunication Networks and Systems, The Royal Institute of Technology, S-100 44 Stockholm 70, Sweden.

27. Evensen R.
Library of Congress, Division for the Blind and Physically Handicapped, 1291 Taylor Street N.W., Washington D.C. 20542, USA.

28. Evert C.F.
Department of Electrical and Computer Engineering, University of Cincinnati, Ohio 45221, USA.

29. Ferrell Prof. W.R.
Systems and Industrial Engineering Department, University of Arizona, Tuscon, Arizona 85721, USA.

30. Forthoffer D.
589 Gresham Avenue, Sunnyvale, California 94086, USA.

31. Fortier Dr. P.A.
Department of Romance Languages, University of Manitoba, Winnipeg, Manitoba, Canada R3T 2N2.

32. Foulke Dr. E.
Perceptual Alternatives Laboratory, University of Louisville, Louisville, Kentucky 40208, USA.

33. Friedman H.J.
Howe Press of Perkins School for the Blind, 175 North Beacon Street, Watertown, Massachusetts 02172, USA.

34. Gildea R.A.J.
Spectacle Pond Road, Littleton, Massachusetts 01460, USA.

35. Gill Dr. J.M.
Warwick Research Unit for the Blind, University of Warwick, Coventry CV4 7AL, England.

36. Grandjean E.
Mathematiques Appliquees - Informatique, University Scientifique et Medicale de Grenoble, 38041 Grenoble Cedex, France.

37. Grootenhuis Drs. J.
Nederlandsche Blindenbibliotheek, Noordwal 7, Den Haag, The Netherlands.

38. Hallenbeck Dr. C.E.
Psychology Department, University of Kansas, Lawrence, Kansas 66045, USA.

39. Hooper Ms. M.
1255 Pine Avenue, Clearwater, Florida 33516, USA.

40. Horvath Dipl. Ing. Z.
Trask Datasystem Ab, Stocksund, Sweden.

41. Humphreys J.
Warwick Research Unit for the Blind, University of Warwick, Coventry CV4 7AL, England.

42. Hyland T.
Triformation Systems Inc., P.O. Box 2433, Stuart, Florida 33494, USA.

43. Iguchi J.
Tokyo Helen Keller Institute, 4-170 Nishiokubo, Shinjuku-ku, Tokyo, Japan.

44. Ingham Dr. K.R.
American Systems Inc., 123 Water Street, Watertown, Massachusetts 02172, USA.

45. Jensen S.
The Danish Association of the Blind, Randersgade 68, 2100 Copenhagen, Denmark.

46. Kalin E.
Scientific American, 415 Madison Avenue, New York, New York 10017, USA.

47. Kalisky A.
National Physical Laboratory of Israel, Givat Ram, 91999 Jerusalem, Israel.

48. Kaplan Ms. J.
American Foundation for the Blind, 15 West 16th Street, New York, New York 10011, USA.

49. Keeping D.
University of Manitoba, 118C Engineering Building, Winnipeg, Manitoba R3T 2N2, Canada.

50. Klitzner H.
Statistics Department, Baruch College/Cuny, 46 East 26th Street, New York, New York 10017 USA.

51. Knock E.
Arkansas Enterprises for the Blind, 2811 Fair Park Boulevard, P.O. Box 4055, Asher Avenue Station, Little Rock, Arkansas 72204, USA.

52. Konstantinov K.
Union of the Blind in Bulgaria, 172 Naitcho Tzanov Street, Sofia 1309, Bulgaria.

53. Kramer Mrs.
Lighthouse Library Services, New York Association for the Blind, 111 East 59th Street, New York, New York 10022, USA.

54. Krebs B.
2035 NE 164 Street, N. Miami Beach, Florida 33162, USA.

55. Kueppers Dr. Ing. H.J.
Stiftung Rehabilitation, D-69 Heidelberg, Postfach 101 409, West Germany.

56. Kuipers J.W.
Nederlandsche Blindenbibliotheek, Noordwal 7, The Hague, The Netherlands.

57. Lang Ms. E.
Data Operations Inc., 330 West 34th Street, New York, New York 10017, USA.

58. Lass Ms. M.
5300 Hamilton Avenue, Apt. 804, Cincinnati, Ohio 45224, USA.

59. Laurence G.L.
Royal Blind Society of New South Wales, Mitchell Street, P.O. Box 176, Burwood, New South Wales 2134, Australia.

60. Levine Ms. H.
5300 Hamilton Avenue, Apt. 1404, Cincinnati, Ohio 45224, USA.

61. Levine Mrs. L.M.
National Braille Association, 85 Godwin Avenue, Midland Park, New Jersey 07432, USA.

62. Lewin F.
Control Computing Laboratories, School of Electrical Engineering, University of New South Wales, P.O. Box 1, Kensingoony N.S.W., Australia 2033.

63. Lindstrom Dr. J.I.
Handikappinstitutet, Fack, S-161 25 Bromma 1, Sweden.

64. Looijen M.
Rekencentrum T.H.-Delft, Michiel de Ruyterweg 10-12, Delft, Netherlands.

65. Mann Ms. A.
907 Lake Shore Drive, Apt. 2606, Chicago, Illinois 60611, USA.

66. Mann Prof. R.W.
Department of Mechanical Engineering, Massachusetts Institute of Technology, Cambridge, Massachusetts 02319, USA.

67. Martin W.H.
4735 E. Hedges Avenue, Fresno, California 93703, USA.

68. Maure D.R.
R.T.D.D., American Foundation for the Blind, 15 West 16th Street, New York, New York 10011, USA.

69. Maure Ms. S.
Braille Institute of America, 741 N. Vermont Avenue, Los Angeles, California 90029, USA.

70. Meischner Ing. G.
Gureg-Elektronik, D-8013 Munchen - Haar, Zunftstrasse 11, West Germany.

71. Merz J.R.
Automation Industries Inc., Vitro Laboratories Division, 14000 Georgia Avenue, Silver Sprint, Maryland 20910, USA.

72. Metters Dr. J.S.
Department of Health and Social Security, Alexander Fleming House, Elephant and Castle, London SE1 6BY, England.

73. Morris F.
Education Services Center, Computer Services, 2000 West Loop South, Houston, Texas 77027, USA.

74. Mulholland Ms. M.E.
American Foundation for the Blind, 15 West 16th Street, New York, New York 10011, USA.

75. Mundy G.W.
Clovernook Printing House for the Blind, 7000 Hamilton Avenue, Cincinnati, Ohio 45231, USA.

76. Munoz Prof. E.
Escuela Tecnica Superior de Ingenieros de Telecomunicacion, Laboratotio de Electronica 2, Cuidad Universitaria, Madrid 3, Spain.

77. Murname Prof. J.I.
Department of English and Modern Languages, Ahmadu Bello University, Zaria, N.C. State, Nigeria.

78. Nahas J.J.
Department of Electrical Engineering, University of Notre Dame, Notre Dame, Indiana 46556, USA.

79. Nemeth Prof. A.
University of Detroit, 16240 Fairfield Avenue, Detroit, Michigan 48221, USA.

80. Oster J.
Port City Press Inc., 1323 Greenwood Road, Baltimore, Maryland 21208, USA.

81. Patrick Prof. P.H.
Department of Music, American University, Washington D.C. 20016, USA.

82. Penska J.
02-024 Warszawa, ul. Daleka 8 M 83, Poland.

83. Perry P.
IRS Publications Service Bureau, 1111 Constitution Avenue N.W., Room 1550, Washington D.C. 20224, USA.

84. Pielasch Dr. Dr. H.
Blinden-und-Sehschwachen-Verband der DDR, 102 Berlin, Poststrasse 4/5, German Democractic Republic.

85. Van Der Poel Prof. Dr. Ir.
Delft University of Technology, Department of Mathematics, 132 Julianalaan, Delft, The Netherlands.

86. Potter S.
State Services for the Blind, 1745 University Avenue, St. Paul, Minnesota 55104, USA.

87. Rabby R.
136 East 55 Street, Apt. 8E, New York, New York 10022, USA.

88. Raeder W.M.
National Braille Press, 88 St. Stephen Street, Boston, Massachusetts 02115, USA.

89. Rosenfeld Ms. J.
Hellen Keller National Center for Deaf-Blind Youths and Adults, 111 Middle Neck Road, Sands Point, New York 11050, USA.

90. Rottier Mlle. B.
SAGEM, Department Teletransmissions, 2 rue Ancelle, 92521 Neuilly, France.

91. Rouse R.D.
Hadley School for the Blind, 700 Elm Street, Winnetka, Illinois 60093, USA.

92. Ruch E.
American Foundation for the Blind, 15 West 16th Street, New York, New York 10011, USA.

93. Sakai Prof. T.
Department of Information Science, Kyoto University, Kyoto, Japan.

94. Santana Dr. J.R.
University of Puerto Rico Faculty, Apartment B-7, Rio Piedras, Puerto Rico 00931.

95. Schenk H.H.
Deutsche Blindenstudienanstalt, D-355 Marburg/Lahn, Am Schlag 8, West Germany.

96. Schick Mrs. B.
Friedensstrasse 43, 7518 Bretten, German Federal Republic

97. Schopper J.
Bayer. Landesschule fur Blinde, D-8000 Munchen 60, Wintrichring 84, West Germany.

98. Simpson Dr. S.
Duxbury Systems Inc., P.O. Box 1523, Duxbury, Massachusetts 02332, USA.

99. Skovmand J.
Department of Development, Statens Institut for Blinde eg Svagsynede, Rymarksvej 1, DK 2900 Hellerup, Denmark.

100. Solente Mlle.
Conservatoire National des Arts et Metiers, 292 rue Saint-Martin, 75141 Paris Cedex 03, France.

101. Sorke W.
D-8941 Buxheim, Stifterstr. 2, West Germany.

102. Spanjersberg A.A.
Dr. Neher Laboratory, St. Paulusstraat 4, Leidschendam, The Netherlands.

103. Spanjersberg H.A.
University of Technology, Department of Electrical Engineering, Laboratory for Data Processing, Mekelweg 4, Delft, The Netherlands.

104. Spungin Ms. S.
American Foundation for the Blind, 15 West 16th Street, New York, New York 10011, USA.

105. Spychalski D.
Polski Zwiazek Niewidomych, Zarzad Glowny, 00-216 Warszawa, ul. Konwiktorska 9, Poland.

106. Srimanee S.
189/25 Lad-Phrao Road, Bangkok 9, Thailand.

107. Sullivan J.E.
123 Lowell Drive, Stow, Massachusetts 01775, USA.

108. Surlan Prof. Dr. A.
Elektrotechnicki Fakultet, Sarajevo, Lukavica, Postanski Pretinac 309, Yugoslavia.

109. Svetislav Zagorac,
Zavod za Slijepu Djecu, 71000 Sarajevo, Yugoslavia.

110. Swail J.C.
Radio and Electrical Engineering Division, National Research Council of Canada, Ottawa, Ontario K1A OR8, Canada.

111. Taylor J.A.
Columbus Technical Institute, 550 East Spring Street, Columbus, Ohio 43215, USA.

112. Tobin Dr. M.J.
R.C.E.V.H., 50 Wellington Road, Edgbaston, Birmingham, England.

113. Truquet Mlle. M.
9 rue Alain Lesage, Residence Semiramis, 31400 Toulouse, France.

114. Tschirner Dr. S.
Deutsche Zentralbucherei fur Blinde in Leipzig, 701 Leipzig, Gustav-Adolf-Strasse 7 (Louis-Braille-Haus), Postfach 245, German Democratic Republic.

115. Ussik V.
All Russia Association of the Blind, Novaja Plostchad 14, Moscow, USSR.

116. Vinding J.
Dansk Blindesamfund, Randersgade 68, 2100 Copenhagen O, Denmark.

117. Vliegenthart M.J.
Dravikstraat 24, Geldorp, The Netherlands.

118. Vrana Ing. K.
Vyvojove Dilny Cs. Akademie Ved, Hosova 4, Praha 1, 110.00 Czechoslovakia.

119. Werner Prof. Dr. H.
44 Munster/Westf., Besselweg 8, West Germany.

120. West Miss S.R.
Department of Health and Social Security, Alexander Fleming House, Elephant and Castle, London SE1 6BY, England.

121. Westland Ir. A.N.
Technological University Delft, Leeghwaterstr. 3, Delft, The Netherlands.

122. Wise T.W.
Triformation Systems Inc., P.O. Box 2433, Stuart, Florida 33494, USA.

123. Zawistowski W.A.
00-901 Warszawa, Computation Centre, P.O. Box 22, Palace of Culture, Poland.

124. Zimin B.
All Russian Association of the Blind, Novaja Plostchad 14, Moscow, USSR.

125. Zivko Jezdimir
Centar za Profesionalnu Rehabilitaciju i Zaposlajavanje Slijepih, 71000 Sarajevo, Nedarici, Lukavicka Cesta 6, Yugoslavia.

BRAILLE RESEARCH NEWSLETTER

No. 6 October 1977

edited by

J.M. Gill and L.L. Clark

Warwick Research Unit for
the Blind
University of Warwick
Coventry CV4 7AL
England

American Foundation for
the Blind
15 West 16th Street
New York 10011
U.S.A.

Contents

	Page
Editorial	2
The Introduction of Braille Produced by Computer at The Canadian National Institute for the Blind by D.A.G. Brown	4
The Efficiency of Braille as a Medium of Communication by J.E. Buckley	11
The Braille Press and Its Future by L.L. Clark	26
History and Status of the Computer Generated Braille Project by J. Geil	35
An Alternative Approach to Semi-Automatic Brailling by D.J. Daily	45
Argonne System for Braille Publication by A. Grunwald	62
The BRS 76 Braillocord System	74
TSPS Braille Display by G.F. Dalrymple	78
Electronic Aids for the Blind at The Polytechnical University of Madrid by E. Muñoz, A. García, C. López and R. Martínez	82
World Council for the Welfare of the Blind Committee on Computerised Braille Production by D.W. Croisdale	85
Improvements to the SAGEM Embosser by B. Rottier	87
Braille Burster	87
Braille Microprocessor Translation Program	88

Editorial

Milton D. Graham 1916-1977

We report with much sadness the death in August 1977 of Milton D. Graham, formerly director of the Department of Research of the American Foundation for the Blind, after a brief illness. A firm believer in international collaboration and cooperation, Dr. Graham did much on a personal and professional level to insure that unnecessary duplication of effort and needless human and monetary expense in that duplication did not become the norm in research related to blindness and its sequelae. He was also involved in the organisation of many conferences and seminars focussed on braille and technological advances designed to enhance its use, indeed from the earliest days of his 18 year tenure at the Foundation. In ill health in his last years, Dr. Graham retired from the Foundation in 1975.

Questionnaire results

There were 48 replies to the questionnaire sent out with the last issue.

		YES	NO
1.	I have/have not found Braille Automation Newsletter useful in my work.	46	1
2.	I do/do not want to continue receiving the Newsletter.	47	1
3.	I agree/disagree with your plan to publish in collaboration with another organisation	30	3
4.	I would/would not be willing to pay a reasonable price to cover the cost of the Newsletter.	41	2

	YES	NO
5. I do/do not want the Newsletter in contracted English braille	16	28

In the near future there will be a meeting of the editorial board to make a decision on the future of this publication. The results of our deliberations will be reported in the next issue.

The Introduction of Braille Produced by Computer at The Canadian National Institute for the Blind

D.A.G. Brown
Computer Services, C.N.I.B.
Toronto, Ontario, Canada M4G 3E8

The Institute has had a small business computer (Honeywell) since 1971. It handled mailing, registration, service delivery and causes of blindness statistics, accounting, inventory control and payroll applications. During the years 1971 to 1976 we followed, with considerable interest, the efforts of such organisations as the R.N.I.B., Volunteer Services for the Blind in Philadelphia, the American Printing House, The Atlanta School Board and the University of Manitoba in utilising the computer to produce Grade II braille. We also familiarised ourselves with DOTSYS III and examined the program itself through the kind assistance of George Dalrymple at the Massachusetts Institute of Technology. Unfortunately, it was possible to miss certain sources of valuable information becuase of lack of communication between organisations either developing or using computer produced braille. However, those we did contact in depth during this investigation and learning period (M.I.T., V.S.B. and A.P.H.) gave us valuable assistance.

At the beginning of 1976, C.N.I.B. management gave the green light to go ahead with the installation of the computer braille facility. We were coming to the end of the five year rental period of our existing Honeywell computer and therefore we had a fairly free hand to identify our future computing requirements and type of equipment.

The first decision was that our computer should handle not only computer braille but also our other various applications. At this point, January 1976, we were still quite ignorant of how a computer braille system, using

state of the art computer technology could operate. We contacted Mr. R. Gildea, located in Colorado, who whilst working for the Mitre Corporation had been the project director for the development of the DOTSYS translation system in 1969. He gave us valuable advice concerning translation systems and the use of "Mini" computers plus a walk-through of the Duxbury Braille Translation System produced by Mr. J. Sullivan, Dr. S. Simpson and himself.

Following this meeting, we decided that our new computer would need to be capable of supporting a minimum of 16 terminals, have both disc and tape storage of data, be able to handle easily devices manufactured by various companies, use advanced methods of information handling and enable the use of COBOL and FORTRAN programming languages. Part of these requirements were dictated by a new Library Cataloguing System we were also planning at this time. We also decided on the method of computer braille production we wanted.

The braille system can be divided into three parts

1. the entry of text on to the computer
2. the translation of text into Grade II
3. the embossing of the translated text.

The first section, text entry, is now a fairly common computer application. We followed the general practice of having a terminal (in our case a visual display screen, a device with a television-like screen and a typewriter-like keyboard) linked through a cable to the computer. The operator types the text in upper and lower case just like a typist, on to the terminal. The text appears on the screen and is also recorded by the computer on to a storage device. Typing mistakes can be corrected at the time or by recalling the stored text back to the terminal, changing it and restoring it. We placed high emphasis on this input function because it is the slowest and most expensive part of the computer braille process.

The second section, translation, required further thought. DOTSYS III, whilst a remarkable piece of systems design, has some drawbacks in practical use. It requires various special codes to be placed in the text to control such items as paragraphing, capital letters etc. It does not allow upper and lower case text input. Automatic tabulating, facilitating the production of columns of information such as a table, an index or agenda is not available, running page titles, semi-automatic ink print page numbering and a number of other facilities are not present. DOTSYS III also requires a fairly large computer to run it, and it is unsupported. In other words, the user has to shop around for help if the contraction process does not work properly. On the other hand, acquisition is virtually free of charge. However given the drawbacks and recognising that the CNIB will be producing braille for many years to come, we decided not to use it on the grounds that the saving in initial costs would be rapidly overtaken by costs of implementation, unsophisticated input methods and difficulty of maintenance.

So far as we knew at this time we had two alternatives. The Duxbury Braille Translation System put forward by Mr. Gildea and colleagues and the American Systems Inc. translator by Dr. K. Ingham. We spoke to Dr. Ingham but he advised that ASI would supply only a complete package including the computer. However we wanted a free hand in choice of equipment and there would have been problems in an over the border arrangement so we did not proceed further with ASI. We paid a visit to Mr. Sullivan and Dr. Simpson for a detailed examination of their system. The translator was demonstrated on their own computer with test texts and a list of words which were, because of the letter groups and the often tortuous rules of Grade II braille, particularly difficult to translate properly. They indicated willingness to install the computer system on the computer of our choice and discussed with us our general computing needs.

The third part of the whole system is the embossing device and during our various travels we had solicited comments on the Triformation LED-120. Triformation is a small company in Stuart, Florida run by a group of capable people interested in the technological challenge of braille output. We decided we should at least start with one LED-120 and if satisfied, continue the relationship with Triformation.

Finally therefore, we could outline all of the systems and needs for the replacement computer and we began a rapid review with the manufacturer's representatives in Toronto. For those who may ask, we also looked at time sharing via a bureau, but finally decided on a new offering by Data General Ltd. called the Eclipse C300 - one of the new breed of so called "Mini" computers. By March 1976, our own management approved the plan and budget and we sent out a frightening group of purchase orders. One new computer for installation in July 1976, one braille translator and text editor with various supporting programs, manuals and user guide from Duxbury Systems Inc., for installation in August, one LED-120 from Triformation and a handful of video display screens purchased in Toronto.

Happily all of our suppliers met their deadlines according to specification and without any price changes. So in September 1976, we launched our new baby under the wondering view of many of our own colleagues at the C.N.I.B. We had two surprises for them, firstly the quality of braille produced by the LED-120 was excellent and secondly, so was the translation. As those of you in other agencies will realise these two points are the most often criticised in automated methods of braille translation. As so clearly pointed out to us by Bob Haynes of APH, quality is a requirement without compromise and we worked very hard to achieve it. At the time of writing, mid-June 1977, we have not received any criticism on this point.

When Dr. Gill, University of Warwick, asked me to write this article for his newsletter, I was pleased to do so but thought that at least some time should elapse to allow experience to be reported. The present position is that we have two online terminals inputting text to the computer. The operators of the terminals had no previous knowledge of braille but were excellent typists and are achieving a very high rate of throughput due to the text editor program. We plan to add a third screen and operator by the end of this year. The translator is running on the Eclipse at about 1300 words per minute with excellent accuracy thanks to the continued support from Duxbury Systems by way of table maintenance and a further advanced training program by Mr. Sullivan.

We have Phase 1 of our library cataloguing system installed on the Eclipse plus mailing and inventory control. The remaining systems registration, payroll and accounting will be converted by mid-July 1977. We are also preparing to review a new automatic stereograph produced by Triformation Inc., which will run at 30 characters per second. This will enable us to produce plates as easily as paper on the LED-120. One area we have not yet touched is magnetic tape material produced by publishing houses as input to our translation system. It is high on our priority list and we are looking forward to it.

I would like to discuss some of the more important points concerning braille production by the computer. Because any system is a dynamic changing thing, it is capable of being defined more than one way. This means that we are presented with as many different methods as there are advisors. Very confusing. So firstly is to avoid being locked into a piece of equipment or a method.

For example, the program should run on a variety of computers. Now COBOL is supposed to be universal, but this is not really true because of the way different computers handle files of data. Also a large computer can handle files of data. Also a large computer can

handle a higher level of complication permitted by COBOL than can a small machine. The use of terminals often marks considerable differences in methods of implementation between computers, even when both use the same language. Without wishing to necessarily advertise, Duxbury got around this problem by programming in FORTRAN using simple sequential files. Generally speaking, FORTRAN is not a widely used language commercially but is usually available on most computers because of scientific and statistical requirements. Its structure usually follows IBM 1130 implementation and it is controlled under the ANSI standards. The main point is that the differences of implementation between large and small computers is not as pronounced as COBOL.

The computer chosen should handle terminals efficiently and be capable of other administrative functions as well as computer braille. Terminals place a considerable overhead on a computer and you should carefully forecast your total requirements as far as possible and insure that the computer can be upgraded in place without programming changes. Alternatively, if you decide to use a bureau to start, obtain a mini computer which allows growth but is small enough initially to be cost justified and use it for text editing. Take tapes to the bureau for translation and bring the translated tapes back to your mini for it to drive the braille embosser.

Lastly, the heart of the system, the translator. Do not commit yourself to DOTSYS III without actually reviewing the other translators available. At the beginning, there is so much to learn that a decision to go with DOTSYS III may be a decision based on ignorance which may later be regretted. If funds are limited, DOTSYS III is a great temptation but in my view it is not a system for the inexperienced. If expert programmers are on hand to utilise it properly, as in the case of the University of Manitoba or at Atlanta, then that is a

different story. In the years ahead, we will see a translator built right into a micro computer. But for now, with a limited market and funds for development the one or two experienced suppliers will give predetermined acceptable results. The ultimate answer to the software problem lies with simpler and more straightforward rules for Grade II contraction. Efforts are being made in this direction which we support and will ultimately be of benefit to the braille user generally and to the newly blind.

The Efficiency of Braille as a Medium of Communication

John E. Buckley

Department of Speech and Theatre
University of Tennessee, Knoxville,
Tennessee 37916, U.S.A.

Although recent advances in technology have greatly expanded the communication repertoire of the blind, a knowledge of braille is probably still the single most important communication skill for many blind people. Braille is valuable insofar as it is able to communicate ideas quickly and accurately. Like any symbol system, its ability to transmit information efficiently is the ultimate test of its effectiveness. Objective procedures exist not only to determine how effective braille is as a means of communication but also to gauge the relative efficiency of each braille whole-word sign.

What is involved, to oversimplify, is a comparison between the whole-word signs in grade II braille and written standard American English. More specifically, with what frequency are each of the 149 whole-word signs used in standard English? One of the principle underpinnings of the braille system is the belief that whole-word signs should represent those words which are used most frequently in written English and are most in need of abbreviation. The extent to which this assumption is true may be verified by content analysis. Although capable of more sophisticated applications, content analysis is important to the study of braille because of two major works in linguistics which make it possible to determine, with reasonable accuracy, the relative efficiency of whole-word signs for written standard American English.

The first of these is W. Nelson Francis' *A Computational Analysis of Present-day American English*, (ref. 1), the results of a six year study by Francis and his colleagues

in the Brown University Linguistics Department on adult English. Drawing reading matter from eighteen different genres (e.g. news, reportage, sports, hobbies, religion, and science), Francis assembled a corpus of slightly more than 1 million words which was designed to be representative of a cross-section of reading matter. The Brown corpus, as it is known, generated 50,406 distinct words.

The American Heritage Word Frequency Book (ref 2), by J.B. Carroll was commissioned to supply background data for the *American Heritage School Dictionary*. Its slightly more than five million word corpus was drawn to represent standard written children's English in the United States. Therefore, works of fiction and non-fiction, children's magazines, textbooks, etc., for children in grades 3-9 compose the corpus and the 86,741 distinct words which it contains.

Both of these studies have several advantages which recommend them in assessing the efficiency of braille:

1. With one million and five million words respectively, the Brown and American Heritage Corpora are of sufficiently large size to provide a meaningful sample. The size of the text analysed is important since a significant number of words in English occur only once in every one million words of text. For example, a smaller corpus of 250,000 words, the equivalent of two standard-size paperback books, would fail to include a large number of such words.

2. The original data from both studies are stored on computer tape and, consequently, may be analysed in greater detail than are presented here. Frequency of certain words "Spirit" and "lord", for example, appear with much greater frequency in the religious genre. Examination of the original data would aid in studying such relationships.

3. That both studies are confined to standard written English is so obvious that its merit might be overlooked. Written English is different from spoken English. Braille is concerned either with written English or with spoken English as it is written. These are precisely the criteria that governed the collection of these corpora by Francis and Carroll.

4. Just as written and spoken language are essentially different, so too are children's language and adult's language. This is not to say that the fundamental vocabulary is distinct. It is, however, a singular advantage to have both an extensive study of child and adult language for purposes of comparison.

It is the purpose of this paper to sketch (i) the whole-word signs that are significant aids to effective communication, (ii) whole-word signs which are of marginal value in efficient communication, and (iii) some suggestions for improving the general efficiency of braille. These views are presented in the hope of generating a more extensive discussion of the braille system, its effectiveness, and possible improvement.

Before turning to the areas in which whole-word signs serve to advantage, it may be well to clarify what is meant by "efficiency in communication". For purposes of measuring braille effectiveness, three simple tests might be applied.

1. How frequently is the whole-word sign used? Some signs, quite literally, are used thousands of times more often than are others. The extent to which a whole-word is used is easily determined from both the Brown corpus and the American Heritage study.

2. How many cells are saved by the use of the whole-word sign? The saving of space and paper is especially important in commercially printed braille materials. Whole-word signs which occur most frequently usually, but not always, save more space. The amount of space saved is arrived at by calculating the number of cells that would be needed to form the word if there were no whole-word sign. For example:

people	6 cells	(wh)i(ch)	3 cells
p	1 cell	(wh)	1 cell
saved	5 cells	saved	2 cells

3. Is a clearly more efficient alternative to the present whole-word sign possible? Braille is not being employed to its maximum capability if a word not presently represented by a whole-word sign occurs with much greater frequency and resultant saving of space than "people" or "which". If a word could be logically represented by "p" or "wh", the communicative efficiency of the system would be significantly improved.

In general, whole-word signs are a most efficient method of communication. Figure 1 indicates the large number of the most frequently occurring words in standard written English which are represented by a whole-word sign. Fifty-eight of the 100 most frequently occurring words in the Brown corpus have whole-word equivalents, while most of the remainder have too few letters to benefit from contraction. Whereas the median average frequency of occurrence for all written English words in the Brown corpus is only 2 and the modal average is 1, the median average for words having whole-word signs is 665 and the modal average is 145. On the average, whole-word signs are used to represent those words which appear most regularly in written standard American English.

Figure 1. Most Commonly Used Whole-Word Signs

Rank in Brown Corpus		Frequency in Brown Corpus	Rank in American Heritage	Frequency in American Heritage	Frequency/million American Heritage
1	the	69,971	1	373,123	73,122
2	of	36,411	2	146,001	28,461
3	and	28,852	3	133,899	26,172
4	to	26,149	4	121,347	23,653
6	in	21,341	6	99,108	19,366
7	that	10,595	9	47,443	9,266
9	was	9,816	13	40,934	7,457
11	for	9,489	12	39,322	7,487
12	it	8,756	10	47,284	9,179
13	with	7,289	17	30,455	5,933
14	as	7,250	16	32,208	6,296
15	has	6,997	62	10,369	2,003
17	be	6,377	21	23,756	4,554
19	by	5,305	27	20,189	3,924
21	this	5,146	22	23,301	4,517
22	had	5,133	29	20,511	3,634
23	not	6,609	30	18,645	3,631
25	but	4,381	31	19,196	3,620
26	from	4,349	23	22,799	4,456
28	have	3,941	25	22,337	4,345
31	which	3,462	41	14,016	2,678
32	one	3,292	28	19,976	3,908
33	you	3,286	8	50,957	9,573

The ability of the braille whole-word system to transmit efficiently most ideas is an accomplishment which should not be minimised. With few exceptions, whole-word signs represent those words which appear most frequently in standard English. While averages convey a general impression, they may, however, obscure as much as they reveal.

Many words represented by whole word signs, for example, are used with such little frequency that they are of marginal value. Eleven words with whole-word equivalents occur less than 24 times in the 1,014,000 word Brown corpus, 20 occur less than 75 times, and 36 appear less than 200 times. Figure 2 lists the least frequently used whole-word signs and their frequencies in adult English. These figures are somewhat inflated since two words sharing the same stem are added together and treated as a single word on the assumption that learning of such signs is more analogous to learning a single new sign than two separate and distinct signs. Therefore, words like "receive" and "receiving", "declare" and "declaring" are added together and treated as a single sign.

Allocating whole-word signs to words which appear so rarely in written English is a serious limitation on the effectiveness of braille. The Brown corpus would occupy 2,393 pages of standard paperback book print (ref. 3), but about one in four braille whole-word signs, 24 per cent, would be used fewer than 200 times in a collection of this scope. Expressed another way, the average whole-word sign is used between 3 and 300 times more often than are these seldom used symbols.

Not only do these signs occur infrequently but they also result in a very minimal saving of space. If the 149 whole-word signs are rank-ordered and divided into percentiles (the first fifteen in percentiles 1-10, the second fifteen in percentiles 11-20, etc.), it is possible to obtain a rough approximation of the cells, or space,

Figure 2. Least Frequently Used Whole-Word Signs

(Note: The frequencies presented here are per one million words of standard prose.)

Word	Frequency
father	183
spirit	182
beyond	149
letter	145
knowledge	145
below	145
paid	145
necessary	141
according	139
friend	133
myself	129
herself	125
character	118
receive/receiving	110
afternoon	106
lord	93
immediate	81
besides	78
quick	68
ought	68
yourself	67
ourselves	66
tomorrow	63
beneath	57
blind	47
tonight	38
altogether	30
declare/declaring	18
afterwards	16
conceive	16
perceive	14
yourselves	8
oneself	5

Figure 2 (continued)

Word	Frequency
rejoice	5
deceive	2
braille	1
thyself	0
o'clock	-

that is being saved by signs of differing frequencies (see Figure 3). Probably more than half of the whole-word

Figure 3. Whole-words: Economy of Expression

Percentile	Average Saving of cells	Total Saving of cells	Rank in Brown Corpus
1-10	22,528	337,928	69,971-5,146
45-55	1,272	19,085	702-495
80-90	336	5,040	139-38
90-100	53	797	30-0

signs save more cells themselves, individually, than do all of the signs comprising the last ten percentile. Comparison with paperback publication may be helpful. While it is difficult to receive more than a qualified estimate, printers of paperback books generally estimate about 2,000 printed characters to the page. In other words, in the eight regular-sized paperbacks represented by the million-word Brown corpus, the fifteen least used whole words, as a group would not have reduced a single page of print. The thirty least used whole-words would have saved three pages.

It should be noted, however, that some groups of words are so familiar that they might be more fairly represented as a single category than as several distinct whole-words. Put another way, it is possible that, when learning braille, one remembers only the way that "f" is configured to form the "-self" suffix rather than the individual signs for "oneself", "myself", "himself", "herself", "itself", and "yourself". If learning occurs in this way, it might be more realistic to treat such groups of signs as though they were a single sign for purposes of assessing their efficiency (see Figure 4).

Figure 4. Special Whole-word Groups

Frequency	Words in Group
1481	behind, below, beneath, besides, between, beyond
1233	thyself, oneself, yourself, herself, myself, himself, itself
385	today, tomorrow, tonight
344	ourselves, yourselves

A group of words, regardless of its total frequency, would be of questionable efficiency if each individual word were little used. If, however, only one word in a frequently occurring group is little used (e.g. "beneath" appears 57 times in the Brown corpus), its continued inclusion as a whole-word might be reasonably justified on the grounds that it is learned as a part of the more commonly used group (e.g. whole-words beginning with the low "be").

Not only are whole-word signs allocated for words which occur infrequently in standard English but, ironically, a number of commonly used English words have no braille equivalents. To understand how this problem might be minimised, it is first necessary to review some rudimentary semantics as it applies to braille.

In semantics, one thing, a symbol, may be used to stand for something else, a referent (ref. 4). Therefore, young American children learn the word "father" to stand for the person. When the child goes to school, he/she will learn first to print, and then to write, the written equivalents of the oral symbol for "father". If the child should take a foreign language, he/she will learn that the same referent may be depicted by the symbol padre in Spanish, "Vater" in German, etc. The single referent, in sum, can evoke several different types of appropriate symbolic responses in English and several more in other languages, and the same individual is capable of distinguishing among and using all of these appropriately.

It is axiomatic in semantics that people can, and do, learn new symbols for old referents. It is outside the scope of this paper to argue the case for this type of learning, but it is worth noting that psycholinguistics, communication theory, applied linguistics, and language acquisition have all arrived at similar conclusions. Moreover, everyone, whether conscious of it or not, engages in learning new symbols for old referents several times in their lives. Learning to read print, learning to write, print-users learning to read braille, traditional math users learning abacus calculation, learning of foreign languages, learning stenography and court reporting, and learning to type are only a few of the more obvious.

Understanding that it is possible to learn new symbols for old referents is critical to an introduction of whole-word signs for commonly used words not provided with braille equivalents at present since any new signs would have to replace signs currently in use.

Only seven whole-word signs would appear to be better used representing other words than the ones they currently signify. The words that would be substituted occur between 2 and 7½ times more often than the ones they would replace (figure 5). A number of other words with low frequencies are not included here since the most likely word with which they would be substituted appears only slightly more often. Both the relative and absolute saving of space would be minimal.

To this list might be added a handful of words which occur so frequently that, while their representation by a sign would not result in a significant saving of space, it might aid reading and writing. For example, "is" occurs 10,099 times in the Brown corpus, "are" 4,393, "been" 2,472, and "what" 1,908. Providing signs for these or similar words would do almost nothing for the printer's problems of space, but it would facilitate the reading and writing of grade II braille.

Figure 5. Whole-word Substitutions

Word	Frequency	Cells Saved if Represented by the Whole-word Sign	Net Cells Saved
state/states	1,413	2,826	2,098
spirit	182	728	
she	2,859	2,859	2,058
shall	267	801	
made	1,125	2,250	1,818
mother	216	432	
even	1,171	2,342	1,380
every	491	962	
life	715	1,530	1,244
lord	93	186	
new	1,635	1,635	1,048
name	294	588	
year/years	1,609	1,609	839
young	385	770	

Five of these seven words are among the 100 most frequently occurring in adult English and all are used more regularly than the present median average for whole-word signs.

Neither the Brown corpus nor the American Heritage project is designed to study part-word signs. With the exception of a recent Swedish paper (ref. 5) which, although suggestive, is not directly relevant, no research applicable to the efficiency of part-words could be discovered. This is unfortunate since it seems quite likely that part-word signs hold the greater promise for improving the efficiency of braille.

The Brown and American Heritage studies are, however, helpful in suggesting the prominence of part-words in effective communication. For example, of the 50,400 distinct words included in the Brown corpus, over half of them, 27,864 occur only once, with another 20,631 occurring only twice. Not only are there a large number of words which would be impossible to represent with whole-word signs but these words compose a significant portion of standard American prose. In the Brown study, words which were used fewer than 5 times in a million accounted for 38 per cent of the total corpus.

Part-words may be needed because of the length of a word as well as because of its infrequency. Approximately 80 per cent of written adult English is composed of words having three or more letters and therefore is, theoretically, amenable to part-word signs. For various reasons, the actual use of part-word signs will be nowhere near this large, but the concern here is merely to outline the potential for further investigation. Many standard prefixes have no braille equivalents. Words beginning with "pre-", "post-", and "sub-" occur in the thousands in the Brown and American Heritage works. A more detailed study of the most frequent vowel and consonant combinations in English, prefixes and suffixes, etc., would prove instructive and beneficial. It would, at minimum, provide a solid factual base from which to evaluate the efficiency of part-word signs.

Language, whether written or spoken, is constantly changing. One needs only to read a book or newspaper or letter of a hundred years ago to realise how much standard American English has changed. Style, vocabularly, imagery, etc., have altered dramatically. Braille is fixed and dependable, whereas language is fluid and changing.

Nonetheless, it remains inescapable that braille is, generally, a most efficient means of communication. Four areas of possible improvement have been suggested. First, a significant number of whole-word signs are used with so little frequency as to be of minimal value and might-well be eliminated altogether. Second, seven words which are not currently represented by whole-word signs might be substituted for little used words with whole-word signs. Three, a few words appear with sufficient regularity in standard English that they might deserve a whole-word sign to facilitate reading and writing. Fourth, initial evidence suggests that a detailed investigation of part-word signs, similar to that in the Brown and American Heritage studies, would be most valuable in aiding the assessment of braille efficiency. It is hoped that these data will present a new perspective from which to examine the efficiency of braille as well as stimulate additional discussion on the effectiveness of the braille system.

References

1. W. Nelson Francis, *A Computational Analysis of Present-day American English* (Providence, R.I.: Brown University Press, 1976).

2. J.B. Carroll, *The American Heritage Word Frequency Book* (New York: Houghton, 1971).

3. Interview with James Kelley, Assoc. Dir., University of Tennessee Press (April 23, 1977).

4. C.K. Ogden and J.A. Richards, *The Meaning of Meaning* (New York: Harcourt, Brace, and World, Inc., 1923), pp. 9-12.

5. Arne Zetterstein, *A Statistical Study of the Graphic System of Present-day American English* (Lund, Sweden: Studentenlitteratur, 1969).

The Braille Press and Its Future

L.L. Clark
Research and Technological Development Department
American Foundation for the Blind
New York, New York 10011, USA

At the beginning of 1976, which in terms of recent technological development seems a long time ago, some of us were concerned that advances in minicomputer-assisted translation systems, and the forthcoming microprocessor-based systems, would by-pass applications to the presses that make long runs of braille copies possible. What appeared to be necessary was the development of a new specification for a braille press. Such a specification ought, we thought, to be suited to replacement of present aging presses in the underdeveloped countries.
That is, it ought to cover all of the functions of the present braille presses, and it ought not to require electrical supply, contain motor drive, nor require sophisticated embossing means beyond placing a normally prepared stereotype plate on the flat bed. Yet the specification ought to allow for the retrofitting of a motor drive to up-grade an installation; and it ought to allow for fitting with sophisticated computer-assisted embossing and translation means for applications in the advanced and underdeveloped countries. Finally, we thought, it would be desirable for such a specification to be submitted for bidding to large machinery makers around the world in the expectation that a single source at the best price could be found for braille presses for a world community of users.

What we discovered in the course of our exploration of this idea can be summed up simply: there is no need for such a specification; and there is not likely to be such a need in the future. The reasons and information that support this conclusion (a conclusion that is rather pleasant in a world committed to ceaseless change, it would seem) appear potentially to have interest for a fairly wide spectrum of readers, however; hence this report.

Some readers may have heard of a research proposal that the AFB had submitted to the U.S. Library of Congress. In it, my colleagues and I suggested a computer-assisted embossing system that included as its central novelty a resettable embossing plate on each side of blank braille paper; the pins that would emboss a blank page with braille on both sides (i.e., interpoint) would be under the control of the computer. The result would be a considerable simplification in the printing process, since a continuous supply of paper would be fed to the press, four pages would be embossed at the same time (say, pages 1 and 100 on the first page, and page 2 and 99 on the second page to the right of the centrefold) seriatim. All that would be required at the output would be to staple a book and send it off to a reader. (See Appendix I for an "Executive Summary" of that proposal.)

If one assumes that this scheme would operate as described (of course we believe it would!), a crucial question then becomes whether the bulk of the braille presses around the world are flat bed or whether they are rotary. If the majority of presses were rotary, say, then we could not anticipate up-grading such presses by retro-fitting of resettable plates as a very important advantage of our suggested scheme.

We were fortunate enough to engage the help of Mr. Vergil Zickel, formerly the supervisor of braille printing at the American Printing House for the Blind in Louisville, Kentucky, one of the world's largest producers of braille product. Mr. Zickel is now retired, and graciously consented to assist us in our enquiry. What he has discovered may well have interest for a wide variety of readers:

About 90 years ago the "thin plate" method for printing braille was developed. This replaced hand-set metal type and shallac-reinforced paper masters. The thin plate method employs a sheet of zinc, brass, iron,

and sometimes aluminium, roughly .010-inch (0.25 mm) thick and 11 inches wide by 22 inches long (c. 30 by 56 cm), which is folded to make a double plate 11 inches (30 cm) square. When embossed with braille dots, this thin plate becomes in effect a male and female die. To produce paper copies the paper is placed between the two parts of the metal plate, and pressure is applied to the outside surfaces of the plate.

The first printing presses resembled the wringer found on old-fashioned washing machines: the plate-paper sandwich was inserted into a wringer type of press having rubber rollers. In later models, the rubber rollers were replaced with metal rollers, a rubber pad being used to prevent the crushing of the braille dots.

Although the invention of the thin plate was a major advance, using it with a wringer type of press still entailed a slow and labour-intensive means of producing braille product. Soon after 1900, however, the flat bed press was adapted to accept the thin plate, making possible a true production procedure for making braille copies. With this method, plates could be changed in a few minutes, and press runs of 800 and 1500 copies per hour could be achieved. This combination of technologies has many advantages. Braille of the highest quality desired can be produced without difficulty; press speeds for all but the longest runs of copies are respectable; and the presses used are both rugged and simple to repair, since parts are widely available and the niceties of repair can be mastered by a wide variety of craftsmen. This last is so because in point of fact the braille press is essentially an adaptation of machines used in the folding box industry, and even when original tolerances for folding boxes are exceeded with the onset of wear of parts, the precision of braille is retained in the plates used for embossing. An additional advantage is that used presses of this type are readily available as folding machinery is replaced in general industry.

By using paper with a high moisture content that makes very durable braille pages, copies for school or other hard use can also be obtained easily with the flat bed press, in which the high pressures necessary to emboss such strong paper can be achieved.

The most recent refinement in braille presses was the fitting of automatic sheet feed mechanisms. These permit printing speeds two or three times greater than the hand-fed press.

A compilation of sources of standard and high speed presses is given in Appendix II, along with some representative current prices in the USA.

The final question we tried to answer in this investigation was the extent to which flat-bed vs. rotary presses can be found around the world. Although a definitive answer is not yet available, we anticipate that one will soon be. Dr. Jeanne Kenmore of the Helen Keller International, Inc., New York, initiated a survey of braille presses around the world during 1976, by requesting the completion of a remarkably extensive questionnaire by press operators concerning their equipments, organisation, and procedures. The data has been received from the field, but its analysis has been slowed by lack of time and available personnel. Dr. Kenmore indicated to us that the analysis of the data will proceed rapidly toward the end of this calendar year. But she was able to give us a preliminary opinion in answer to our query. It does seem evident that the flat bed press is the majority choice of equipment, if indeed not the overwhelming choice, around the world; that although the presses do wear and lose their initial precision, the precision of the braille printed is maintained by the precision of the plates used to print it; and that local craftmen can and do learn to cope with the repairs to the relatively simple presses regardless of the state of technical development in a country, no matter where this may be in the world.

In sum, it may be said that the majority of the world's braille presses do offer interesting opportunities for upgrading by retrofitting of motor drive, and by computer assisted embossing plates when the conditions exist for these to be installed, i.e., when electric power is available, when motors and drive mechanisms are secured, and when advanced schemes such as resettable stereotype plates become deployed.

Appendix I

Research and Technological Research Department Proposal to Enhance Production and Stabilise Costs of Press Braille in Response to RFP 76-17 of the Library of Congress - 17 May 1976

Executive Summary

In this proposal we suggest an innovation at the output or printing end of the press braille production process. In the present system, zinc plates are prepared on a stereotyper, inserted into a braille press, paper is fed to the press, and multiple copies of a page are made, stacked, and set aside. Pages are then collated for a book, and then stapled and bound. This process is followed even though the input to the stereotyper is machine-readable, and is the product of a computer transcription process that is highly automated.

In the proposed system, the output of the computer transcription from ink print to braille code is stored on a "floppy disc", part of a minicomputer system associated with the braille press. This text data is then fed to two electromechanical embossers, one at the top and one at the bottom of the braille flatbed press. The pins corresponding to the dots of the braille cell are raised into position and locked, paper is fed automatically into position, the press closes, the pins mate with holes in the opposite plate, and a fully interpointed page of braille is produced. Since the pins can be reset in the time it takes to bring a fresh piece of paper into position, and since the order in which pages are embossed can be programmed easily, an entire book can be embossed, the pages piled one on the other and, when the entire book is printed, it needs only stapling and/or binding to be shipped out. This method eliminates much labour-intensive costs of actual embossing, eliminates the stereotyper,

eliminates the use of zinc or other printing plates. In serial production, the programmable embossing plates and associated control system ought to earn their cost in a very few years. The system is simple and it is reliable.

Appendix II

Suppliers of Braille Presses in the USA

Hand-Fed Braille Presses

1. Thomason National Press Company
   Franklin, Massachusetts

   Model: Thomason Style 5, 14 x 22 Cutter and Creaser (Hand Fed)

2. Chandler and Price, Inc.
   6000 Carnegie Avenue
   Cleveland, Ohio 44103

   Model: C & P 14-1/2 x 22 Die Cutter and Embosser (Hand Fed)

3. Used and Rebuilt Thomason and Chandler & Price presses are available from:

   (a) Everyready Machinist
   137 West 19th Street
   New York, New York 10011

   (b) Nessler and Wagner Co., Inc.
   818 Reedy Street
   Cincinnati, Ohio 45202

4. Additional sources of supply will be found among suppliers of printing and binding machinery in many larger cities, who can set up such presses to print braille.

Automatic Sheet-Fed Presses

1. Thomason National Press Company
   Franklin, Massachusetts

   Model: Thomason 17 x 25 Die Cutter
   Price: US $27,000 + US $2500 for refitting to produce braille

2. Chandler & Price, Inc.
   6000 Carnegie Avenue
   Cleveland, Ohio 44103

   Model: C & P 14-1/2 x 22 Automatic Die Cutter
   Price: US $27,000 + US $2500 for refitting to produce braille

3. Heidelberg Eastern, Inc.
   73-45 Woodhave Boulevard
   Glendale, New York 11227

   Model: Heidelberg 18 x 23 Cylinder Press
   Price: US $38,000 + US $2500 for refitting to produce braille

4. S. & W. Machine Company
532 East 12th Street
Cincinnati, Ohio 45210

Special Note: This firm, in cooperation with Mr. Martin Droege of the Clovernook Printing House for the Blind (7000 Hamilton Avenue, Cincinnati, Ohio), built the web-fed automatic press.

5. American Printing House for the Blind (APH)
Louisville, Kentucky

Special Note: The APH has several web fed cylinder presses that were designed and built by its own personnel.

History and Status of the Computer Generated Braille Project

J. Geil
Education Service Center, 1750 Seamist,
P.O. Box 863, Houston, Texas 77001, USA

In 1975 Region IV Education Service Center undertook a review of the textbook system in use in various districts with the objective of offering suggestions for increasing their effectiveness. Throughout the review recurrent problems with braille texts were indicated. Among these were:

1. Delays in receiving braille material.

2. Receiving the back sections of a braille text three months before receiving the front sections.

3. Unavailability of certain texts in braille.

4. Lack of current braille material.

5. Bulk of braille volumes and storage space required to house them.

These problems led to a study of the reading requirements of the blind or visually handicapped student. The study revealed the following conditions:

1. The blind student has available only a limited variety of reading material.

2. Extensive research or outside reading requires the employment of a human "reader", due to the limited availability of brailled material.

3. The elapsed time between the discovery of the requirement for a brailled publication and its availability can be 12 months or longer.

4. The blind student is further handicapped in that reading material of a current nature is not generally available to him in braille form.

5. Under present methods, the variety and timeliness of braille material is likely to be further reduced as fewer braillists are being trained each year.

The study then shifted to methods employed in the preparation of braille material. The following determinations were made:

1. The manual process of transcribing braille texts is slow and expensive. Elapsed time for transcription of a text can be as much as a year. Cost is estimated at fifteen cents per page by the Atlanta School District.

2. Computer assisted braille texts are prepared by:
   (a) Atlanta School District, Atlanta, Georgia
   (b) Printing House for the Blind, Louisville, Kentucky

3. Braille samples prepared by the Atlanta School District appear inferior to manually transcribed braille.

4. Computer programs and technology exist to:

   (a) Keypunch a printed text, introduce the data to computer tape and convert the data to braille language, thus:
      (i) Print a text by computer, or
      (ii) Print a text by an automatic braille printer.

(b) Type a text and create a cassette tape, introduce the tape to a computer and convert to braille and:
   (i) Create a translated cassette tape for later embossing in braille, or
   (ii) Drive an embosser to braille a text.

(c) Obtain a publisher compositor's tape, introduce the tape to a computer, convert it to braille language and:
   (i) Drive a page embosser creating a text, or
   (ii) Create a translated braille tape to drive a braille press.

The need for more current and a wider variety of reading material for the blind and visually handicapped was certainly evident. Moreover it appeared that the blind student could benefit from participating in computer assisted instruction programs. It further appeared that a wider variety of vocational opportunities were needed by the visually handicapped. In addition, computer generated braille appeared not only feasible but cost effective.

Therefore, in the fall of 1976 the management of Region IV decided to make a substantial investment in hardware and talent to pioneer in the development of computer assisted techniques to aid the handicapped. Initial efforts were to be focused on the visually handicapped with some cursory investigations into the problems of the hearing handicapped. The Region proceeded to acquire a braille translation computer program, an interactive stationary high speed page braille embosser, a portable interactive tape embosser and a number of other related hardware items.

The Region's plans and objectives (Figs. 1 and 2 and Appendix) can be summarised as follows:

1. Develop computer assisted braille II translation capabilities to:
   (a) Accept and translate typewritten input
   (b) Accept and translate foreign languages
   (c) Accept and translate publishers compositors tapes
   (d) Accept and translate computer assisted instruction programs
   (e) Accept and translate news wire service releases.

2. Test and evaluate various interactive embossing devices.

3. Establish a cassette library of translated braille reading material.

4. Provide braille text books and other student reading material from typewritten input and publishers compositors tapes.

5. Develop additional vocational opportunities for the visually handicapped.

6. Establish a daily news release capability on accessible computer disc.

7. Install a computer assisted instruction capability for the Texas School for the Blind and others schools for the visually handicapped.

Early in 1977 the Region received some assistance for the program in the form of a $12,000 grant from the Governor's Coordinating Office for the Visually Handicapped. With these funds and some additional support from Region reserves the project was able to demonstrate a satisfactory braille II computer translated braille capability. From January through May the following projects were initiated:

(i) School Textbooks - The elementary textbook "It Happened This Way" has been placed on cassette tape and translated. It is ready for publication once certain hardware modifications have been made to the braille embosser. The embosser generates what the manufacturer calls standard braille which deviates slightly from Library of Congress braille.

(ii) Outside Reading Material - The minutes of the "AD HOC Advisory Committee of the Visually Handicapped" have been placed on cassette tape.

(iii) Computer Assisted Instruction - CAI programs are currently operable in grade I braille. They are expected to be operable in grade II braille by September if funding is available.

(iv) News Wire Service - Arrangements are being made with the Houston Post for a direct wire tie in to the Region IV computer. The computer file will be updated daily representing a mini-newspaper and processed through the translation program. Among other things the mini paper will contain World, National, State and City news summaries; Sport Scores; Weather; Reviews: Music/Theatre and Book Reviews; People; Commentary; Lynn Ashby; Names in the News; Todays Prayer; and Astrocast. The file will be accessible from any remote location by a braille embossing terminal.

(v) Compositor Tapes - Arrangements were made through the Houston Post to obtain compositor's tapes so that work can commence on this facet of the program.

(v) Vocational Applications - The Texas Bankers Association series entitled "Your Bank and

Personal Money Management" is being reviewed for conversion to a computer assisted instruction (CAI) program.

During the later part of May 1977 a small supplemental grant of $2,160 was received from TEA to support the braille project through the month of June. During this period a more detailed review of problems associated with the translation of compositor's tapes was conducted.

It was determined that compositor's tapes are generally magnetic tapes or punched paper tape using a variety of bit structures and varied languages. This lack of standardisation represents the principle problem to be resolved in translation. A secondary problem will be the "culling" of extraneous press instructions from the text material. Arrangements are being made with Control Data Corporation to assist in resolving these problems.

A cursory review was made of the computer assisted instruction requirements of the Texas School for the Blind. As a result a proposal was prepared proposing the installation of interactive braille embossing terminals at the School. The terminals are to be "on line" with the Region IV computer in Houston making computer assisted instruction available to the students at the School. The Suppes CAI packages will be offered to the school along with the braille translation program, the mini newspaper, the computer games, the Region IV braille "library" and the occupation data bank.

In anticipation of acceptance of the proposal to the School for the Blind, discussions with CDC were initiated on modifying the translation program to accommodate CAI in grade II braille.

To support the School for the Blind installation the Region is seeking two additional grants of $25,000 each. One grant is being sought from the Governor's

Coordinating Office for the Visually Handicapped and one from the Texas Education Agency.

Fig. 1. Braille transcription system

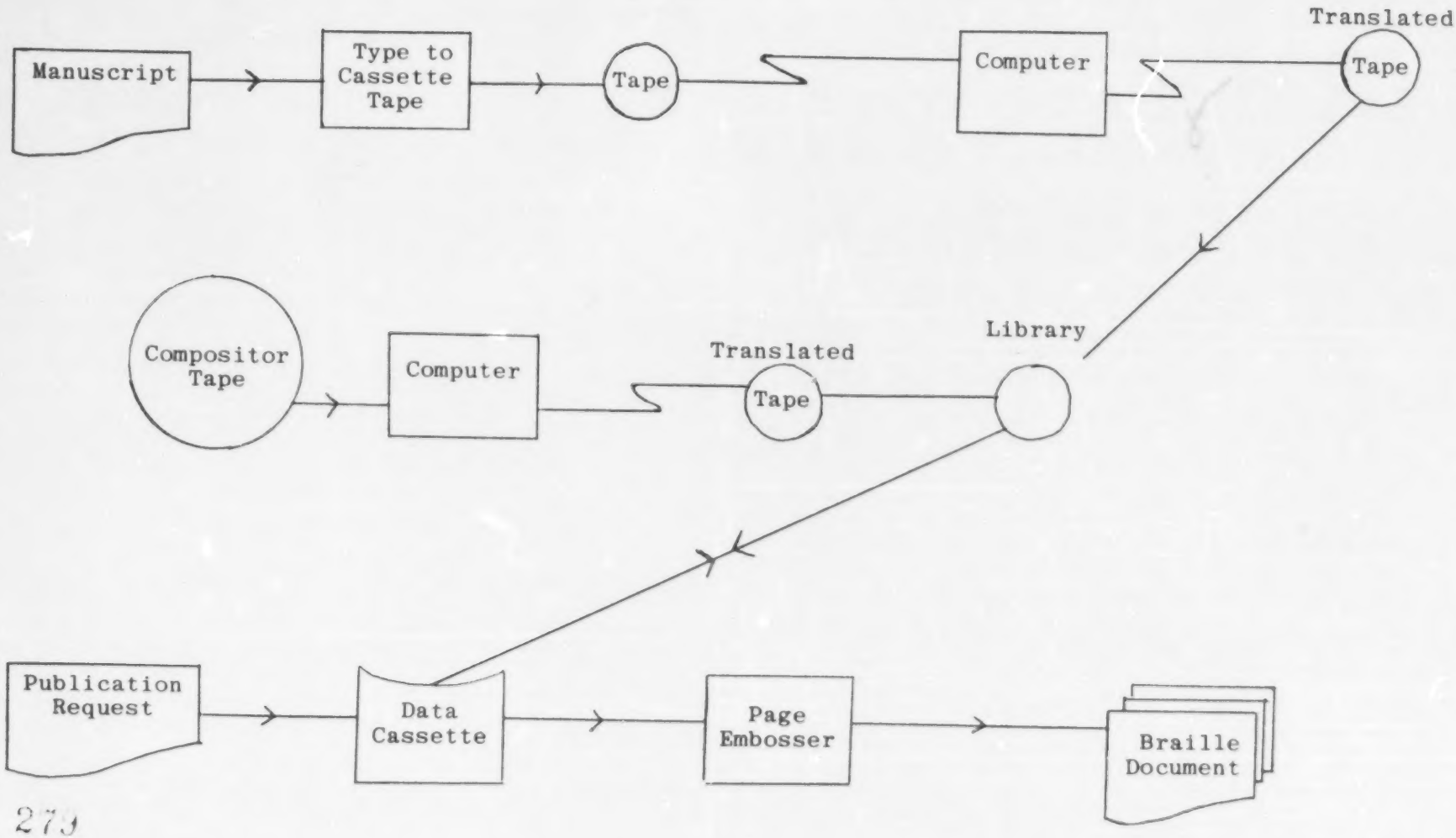

Fig. 2. Computer assisted instruction

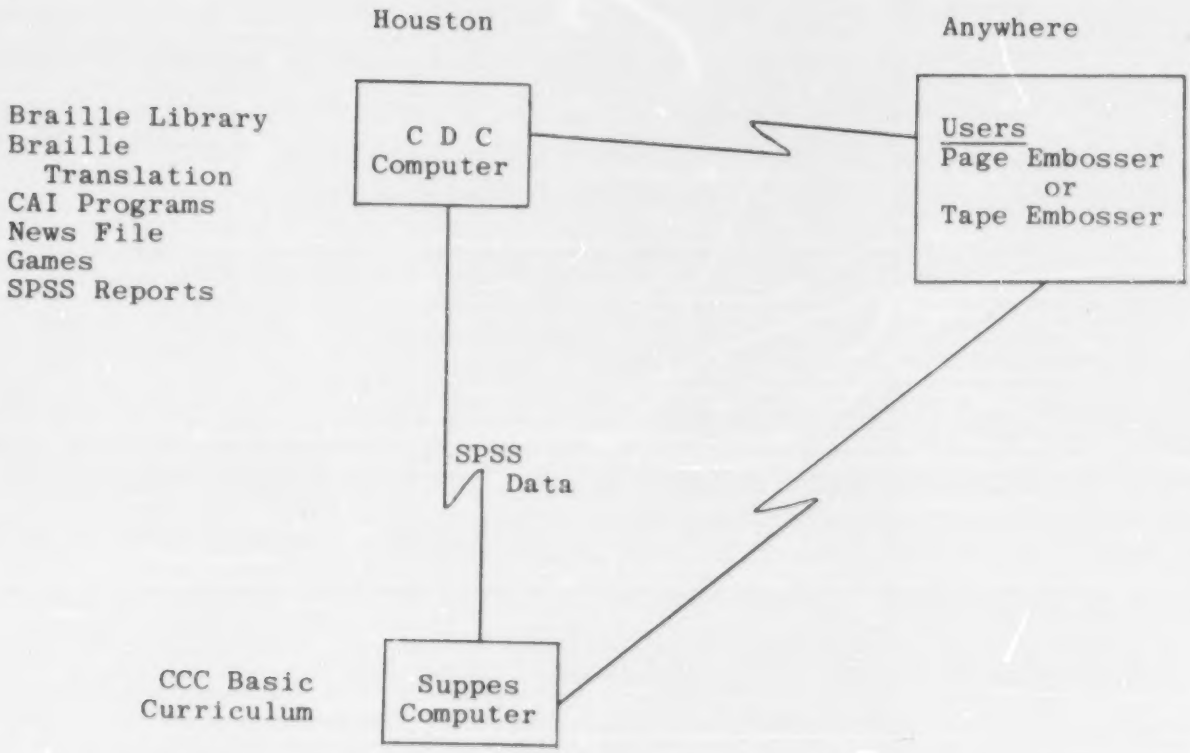

Vocational Applications

- Computer Programming
- Banking
- Brokerage
- News Casting
- Publishing
- Employment Agencies
- Weather Bureau
- Government Agencies
- Ministry

Future Projects

- Foreign Language Translation
- National Network of Braille Cassette Libraries
- Music Translation
- Computer Generated Embossed Graphics

Large Print

Exploratory

- Computerised Variable Type Size Program
- Laser Beam Recorder to Microfiche to Large Print

Deaf and Hard of Hearing

Exploratory

Computer Assisted Instruction

- Total Communication Employing CRT's and Computer Driven Microfiche
- CAI Programs Oriented to the Deaf

An Alternative Approach to Semi-Automatic Brailling

D.J. Daily
Department of Systems and Industrial Engineering,
University of Arizona, Tucson,
Arizona 85721, USA

Overview of Process and Project

The approach here has been to develop an inexpensive way of producing braille using a program* for a small computer and existing hardware technology.

The principle constraint on any brailling system is the cost; there must be little or none. Human services must be on a volunteer basis and hardware must be donated since there are rarely any funds that can be allocated for these purposes. With a view to the high cost of computer translations, the attempt here has been to use the Digital Equipment Corporation's PDP-8. It is a common and relatively inexpensive machine, which increases the likelihood that some owners of such computers would donate time on it to the production of braille. However, because it is a small computer (the smallest has a memory size of 4096, 12 bit words), generally without a large store of secondary memory, one could not always incorporate all the rules involving special symbols and word contraction in a program. Therefore, some of the responsibility for translation must be placed in the hands of a braillist. In order to avoid slow hand brailling and the use of expensive, mechanical brailling devices a specially modified ASR-33 teletype, a common PDP-8 peripheral device was used for embossing.

* The program is available from the University of Arizona.

The project consisted of an experiment to test the practicality and usefulness of this semi-automated approach and a survey to determine the feasibility of using donated PDP-8 computer time for braille production.

The Semi-automated Process

The semi-automated process is depicted in figure 1 and involves the following steps:

1. A trained braillist marks the text in pencil, indicating where Grade II contractions and some special braille symbols occur. This involves making a slash mark following one of 189 abbreviations or contractions in the text or placing one of 2 special symbols over a letter. For example:

   Millions of/ dollar/s have/ been/ spent/ in/ developing/ devices for/ people/ who have/ visual and/ hear/ing/ loss. The/ over/wh/elming/ majority/ of/ these/ devices ar/e not curren/tly in/ use.

   This can be done rapidly since the actual contractions need not be indicated nor their braille equivalent known.

2. A typist creates a paper tape from the marked text using a program similar to EDITOR (a program used to write and modify programs for the PDP-8) to make corrections. The typist makes corrections in English and need have no special knowledge of braille. However, because the teletype lacks a lower case font, capitalisation is indicated by preceding a capitalised letter by an up-arrow (↑). The typist produces the following output for the paragraph above:

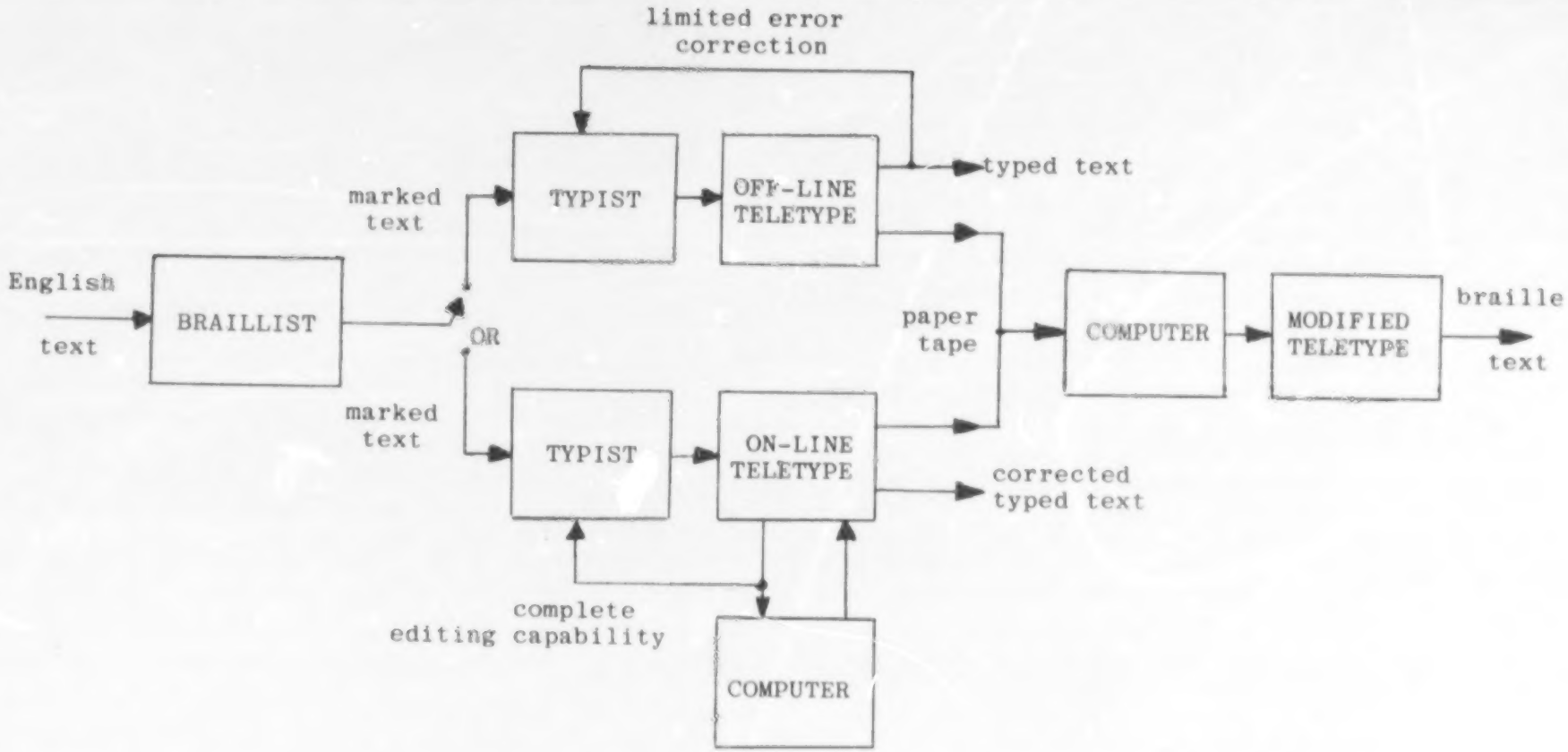

Figure 1. Diagram of the semi-automated English to braille translation process.

286

↑MILLIONS OF/ DOLLAR/S HAVE/ BEEN/ SPENT/ IN/ DEVELOPING/ DEVICES FOR/ PEOPLE/ WHO HAVE/ VISUAL AND/ HEAR/ING/ LOSS. ↑THE/ OVER/WH/ELMING/ MAJORITY/ OF/ THESE/ DEVICES AR/E NOT CURREN/TLY IN/ USE.

If a computer is unavailable for this step, then the paper tape can be created, using the teletype alone. This, however, severely restricts the kinds of corrections that can easily be made. The paper tape must be backspaced to the error and "rubouts" punched over all the positions passed while backspacing. Then the text must be retyped, beginning at the point where the error occurred.

3. The regular type head on the ASR-33 teletype is replaced by one with steel pins which embosses ½ a braille cell at a time, and a platen covered with surgical rubber is substituted for the hard rubber one (see Woodward and Anderson for other modifications). Then heavy bond paper is loaded.

4. The braille program is loaded, and the paper tape containing the text to be brailled is placed in the teletype paper tape reader.

5. The reader is turned on and the program started.

6. The program fills the input buffer with characters from the paper tape. When the buffer is filled, the program begins searching it for the occurrence of a string of characters for which there is a braille contraction. Where no such string is found, each letter is "spelled out". This means three letters are placed in an output buffer, which when printed will emboss the two halves of the braille cell and leave a space to separate cells. When a string of characters, which can

be contracted, is followed by a slash (/), the code for the appropriate braille contraction is placed in the output buffer. When a slash does not follow, the letters are "spelled out". If a slash is accidently placed where no contraction occurs, it is ignored. The interrupt system is used to keep the input buffer full, concurrent with other processes. When enough characters have been placed in the output buffer, the line is embossed backwards, starting with the end of the last whole word in the buffer. This avoids the problem of dividing words at the end of the line and allows the page to be read from left-to-right when turned over.

7. The teletype is restored to the normal configuration.

The Experiment to Test the Semi-automated Approach

The plan of the experiment was to provide small amounts of braille, produced semi-automatically, on request, to meet the personal needs of the visually handicapped in the local environs. As it turned out, however, the service was used exclusively by four blind university students. Although the Tucson Chapter of Books for the Blind and Special Services in the University of Arizona Rehabilitation Center used the service, they did so to process "rush" orders given them by the students mentioned above.

The braillist recommended by the Tucson Chapter of Books for the Blind for the experiment was a trainee who had not completed her studies because arthritis had made the physical act of embossing too painful. Three student volunteer typists were provided by Special Services. For their work they received volunteer service credit as part of the requirements for a course in rehabilitation. They had only average typing skill.

The author had the responsibility for computer and teletype conversion operations, instructing the braillist how to prepare the text for semi-automatic brailling, and teaching the typists how to type the text using the EDITOR program. Special Services provided the "in" box for material to be brailled, a central location for keeping track of the movement of the material through the various phases of its conversion to braille and the "out" box. Their personnel were of great assistance in planning and organisation, as well.

The Results of the Experiment

Training

The braillist experienced no problems adjusting to the use of the special symbols used to represent braille symbols or to marking the text rather than embossing. Indeed, she was relieved that her review of the rules of braille was considerably shortened, since she did not have to study the braille equivalents of English letters and contractions. The choice of marking the end of a contraction, rather than the beginning, made the movement across a line proceed smoothly and naturally, requiring no backtracking, except to double check a decision to contract a group of letters.

The typists quickly learned the location and typing of the few unusual symbols that were introduced into the text. They had no difficulty adjusting to the unusual means of capitalisation. However, they did experience problems adjusting to the use of the EDITOR program. Since they depended on the author for assistance, they received little practice on their own in correction procedures. As a result, they forgot the principle correction commands from one week to the next. It was apparent that the typists were somewhat in awe of the computer; so even when they knew the commands, they were hesitant to implement them without first consulting the author. One

typist, more accustomed to the typewriter, complained of the loud noise generated by the teletype. The other two managed to adapt to it, though a quieter device such as a DEC-WRITER can be used for editing purposes. The teletype is required only for the embossing step.

The author was responsible for converting the teletype to emboss the braille and for starting execution of the computer program. In general, the person responsible for teletype modifications requires some mechanical dexterity to perform the adjustments necessary to obtain maximum embossing height, without punching holes in the paper, and because fine adjustments are needed to return the teletype to normal operation. The computer program, once started, only rarely requires operator invervention. When dealing with very long paper tapes (over 2,000 words), the operator must be prepared to handle jams which necessitate restarting the process, since characters may have been misread. Attentiveness to the feeding of the tape can usually prevent this. The experience here has been that the heavy bond paper must be realigned at approximately ½ hour intervals. This sometimes must be done with regular paper during particularly long print jobs. Toward the end of the experiment, it was discovered that the rubber cover for the print hammer needed replacement because it had been damaged by the pins on the braille punch head. The damage was the result of roughly 28,000 words embossed in this project (including tests of the program before the project was begun) and another related project which used the modified teletype (see Woodward, 1972).

The Time Required to Mark the Text

It was noted earlier that the braillist participating in this experiment had not brailled for some time and was out of practice. In the beginning she could only mark the text at approximately 20 words/minute. Nevertheless,

during the course of the experiment she achieved a rate of 33 words/minute. The rate, of course, will vary with the difficulty of the material because sometimes the rules must be consulted during the process. In a separate experiment, it was found that an experienced braillist with only a few minutes practice could mark the text at 70 words/minute. This means a 7 fold increase in braillist productivity, since a good braillist, while translating and embossing at the same time, can usually achieve, assuming one braille page contains 125 words, only 8-10 words/minute (see Goldish, p. 39).

The Time to Type and Edit

If no editing is done, a paper tape can be created as fast as one can type. If editing is done, three separate times must be considered:

1. The time the typist takes to type the text - which will vary with the skill of the typist;

2. The time the typist takes to make corrections - which depends on the typist's skill at typing and using the EDITOR program;

3. The time the editing program takes to make the paper tape - which is a constant rate limited by the output device used. The teletype punches paper tape as fast as it can type - 10 characters/sec or 100 words/minute, if one assumes an average of 6 characters/word.

Assuming a typing speed of 4o words/minute, with neglible errors, and a tape punching speed of 100 words/minute, a paper tape can, theoretically, be created at the rate of

$$\frac{1}{\frac{1}{40 \text{ words/minute}} + \frac{1}{100 \text{ words/minute}}} \doteq 29 \text{ words/minute}$$

The actual rates (computed from sample material used in the experiment) varied between 6-16 words/minute. The average of the rates was 10 words/minute. This can be attributed to a slower typing rate (some "hunting-and-pecking" was observed) and mistakes which required a correction procedure. Additional time was lost because the typist usually requested confirmation or assistance for a correction.

The Times for Changeover

The time to modify the teletype for braille embossing at first took as long as 20 minutes, but with practice, could be done in 7 minutes, including final adjustments. Restoring the teletype to normal operation took a little longer, generally 10 minutes. More time was required because the normal print head requires finer adjustments than the braille head.

The Time to Emboss

If one assumes the number of braille symbols (e.g. capital and number signs) introduced into the text to be negligible, then because each English letter requires three punches to make the braille equivalent, Grade I brailling can proceed at 1/3 the normal teletype speed, or 33 1/3 words/minute. The time required by the program to search a table for the braille equivalent of a letter, symbol, or contraction produces no delay in embossing, because before the carriage return and line feed from the previous line are completed by the teletype, the next line has been processed and buffered.

The program is never delayed by a lack of text to translate because reading, input buffering, the substitution of braille characters for English characters, and output buffering is three times faster than embossing. The result is that the paper tape reader is often idle

and the program is quiescent, waiting for the teletype to finish printing a character so it can be given another one. A negligible amount of time is spent actually translating text to braille. Therefore, because Grade II braille requires fewer symbols to be printed than Grade I, the embossing rate for Grade II should be faster than 33 words/minute. In practice, embossing rates for samples of text varied between 26 and 75 words/minute. The average of the rates was 36 words/minute.

Turnaround

The time required to process and return to the braille user material submitted for brailling varied from same-day service to as long as three weeks when the braillist was unavailable. Some material was delayed to process requests considered more urgent.

The average turnaround (excluding delays caused by the absence of the braillist or author) was about eight days. The delay was about a week because two or three typing sessions (two per week) were required to complete a batch of text to be submitted to the brailling program. Turnaround could have been much faster if paper tapes were converted to braille as soon as they were completed rather than batching the tapes for one embossing session.

The Types of Material Brailled

The first material to be brailled was ten copies of the announcement of the Semi-automated Braille Project which was to be distributed, by Books for the Blind and Special Services, to potential users. Special Services requested six braille copies of their newsletter and three copies of a brochure describing services and aids for the handicapped at the University of Arizona. The students used the service to obtain braille copies of mimeographed handouts they received in their courses. The handouts included syllabuses, record lists, student teaching guides and assignment lists, biographical sketches and others.

The Translation Quality

As long as the program is functioning properly, the translation will be as good as hand brailling, perhaps even better since corrections are not as tedious and marking is not as tiring as embossing. However, feedback from one user indicated the contraction for "sh" was not being used, rather the letters "s" and "h" were being spelled out. An examination of the paper tape record revealed that the "sh" had not been typed with a slash, indicating that it should be contracted. This was an ommission by either the typist or braillist.

The Page Quality

Users of the service found cell size and alignment to be acceptable. However, while regular braille will "rub down", the embossing done by the teletype rubbed down too easily. The paper used, while a heavy bond, was not as heavy as that used in standard brailling, which was found to be too hard for the pins on the teletype head to penetrate. Experiments with softer rubber platens and layers of different rubbers and sponge rubber did not seem to increase the penetrating ability of the punch in an acceptable manner. If the platen was too soft then the dots were not defined clearly enough. Experiments with different pin lengths did not make an appreciable improvement either. Surgical rubber tubing seemed to be the best choice after all.

The addition of a spring across the empty ribbon guides to give the print head more striking force, while not improving embossing height, reduced the number of adjustments needed to provide maximum height.

The least expensive approach to prevent flattening of the embossed page through use was to spray paint or lacquer it. This is normally done with books for the blind. A more expensive approach that provides permanent copies is to thermoform the page. This is the braille equivalent to photocopying.

Per Unit Output Analysis

The semi-automated approach has three rates that must be considered:

1. The rate at which the braillist marks the text.

2. The rate at which typing and corrections are made to the text, and a paper tape created.

3. The rate at which embossing is done.

Figure 2 illustrates the upper bounds for the rates mentioned above, and the rates obtained by averaging the individual rates computed for material used in the experiment.

	Braillist	Typing and Corrections	Embossing
Upper bound using the EDITOR program	70 (best)	29[2]	33.3[4]
Upper bound punching the paper tape directly	70 (best)	40[2,3]	33.3[4]
Average rates[1]	33 (best for braillist in the Experiment)	10	36

[1]These were obtained by averaging the individual rates for the material used in the experiment.

[2]These figures assume a negligible number of corrections are needed.

[3]If a mistake is discovered when the tape is finally completed, it may have to be retyped from the point the error occurred.

[4]Embossing is done at 1/3 the normal teletype speed.

Figure 2. Upper bounds and average rates for the steps in the semi-automated brailling process.

The upper bound for the overall semi-automated rate using the EDITOR program is:

$$\frac{1}{1/70 \text{ words/minute} + 1/29 \text{ words/minute} + 1/33.3 \text{ words/minute}} \doteq 13 \text{ words/minute.}$$

The upperbound for the overall rate, punching the paper tape directly, is:

$$\frac{1}{1/70 \text{ words/minute} + 1/40 \text{ words/minute} + 1/33.3 \text{ words/minute}} \doteq 14 \text{ words/minute.}$$

The actual overall rate resulting from actual measurements was:

$$\frac{1}{1/33 \text{ words/minute} + 1/10 \text{ words/minute} + 1/36 \text{ words/minute}} \doteq 6 \text{ words/minute.}$$

The lower actual rate can be attributed to generally lower individual rates. The average marking rate for the braillist helping in the experiment was lower than that of an experienced braillist because she was less practiced. The typist used in the experiment typed less than 40 words/minute. The typists, naturally, did make mistakes; and time was required, not only to make the corrections, but to instruct them how they should be made.

Evaluation

Tucson Books for the Blind remarked that our services eased the pressure on them because the Human Factors Laboratory could handle small "rush orders" they found inconvenient. Through the service, Special Services in the University of Arizona Rehabilitation Center could provide their newsletter to their blind clients. Normally,

the newsletter would get a very low priority since its contents are not directly related to essential school work. The fact that the semi-automated approach allowed the newsletter to be brailled by people who, individually, could not translate braille serves to illustrate how this approach can be used to more fully integrate the blind into sighted society. Beyond that, the key individual in the process, the braillist, found her task greatly simplified and her productivity increased because she didn't have to emboss nor did she have to know the braille equivalent for contractions. These are factors which would also simplify the training program for prospective braillists, which, as mentioned earlier, has a 70% certification rate.

The typists found it difficult to remember text correction procedures. Their slow learning of the EDITOR procedures could be improved with more careful instruction or the use of volunteer typists familiar with the program. It should be noted that the use of text correction programs in the publishing industry, by people who would otherwise be unfamiliar with computers, is increasing.

Paper tape used to store a copy of the text to be brailled was found to be bulky and inconvenient. However, a generation of PDP-8 users have managed. The program can be easily modified, using standard routines, to accept input from DEC-TAPES, tape cassettes, or disks. Paper tapes were chosen as the standard because every ASR-33 can handle them, and an ASR-33 is needed for embossing.

The degradation of normal printing, caused by the braille punch head damaging the rubber cover for the print hammer, can be prevented by keeping two covers. One can be used for normal printing and the other for braille embossing. Switching them is a trivial operation. In this case, the damage occurred over a period of many months.

The single instance of inaccurate translation found during the course of the experiment was due to ommissions by the braillist or typist.

The durability of the embossed page, over that used during most of the experiment, can be improved by a coat of spray paint or lacquer. The use of an additional spring on the teletype reduced the number of adjustments needed to obtain optimum embossing height.

Conclusions for the Semi-automatic Braille Portion of The Project

During the two months that the service was offered, the over 25,000 words of braille produced demonstrated:

1. The semi-automated approach eased the burden on the local braille producing agency by using people who individually could not produce braille, but working in concert could.

2. Using the process has been shown to increase the productivity of a braillist as much as seven times.

3. The translation quality is as good as the braillist's knowledge of braille and the typist's accuracy in transcribing it. The process is failsafe when a point is marked for which no contraction exists because the slash is ignored.

4. Page quality is adequate when lacquered or thermoformed.

5. If a typist can type 40 words/minute, the semi-automated rate can exceed that of hand brailling and corrections are considerably easier to make in the semi-automated approach.

References

Anderson, Gary B. and David W. Rogers. *An Inexpensive Braille Terminal Device*. Communications of the ACM, Vol. XI, No. 6, (June 1968).

Daily, Daniel J. *Semi-Automatic Braille*. Human Factors and Man-Machine Systems Laboratory Report, University of Arizona, 1977, 41 pp.

Goldish, Louis H. *Braille in the United States: Its Production, Distribution, and Use*. The American Foundation for the Blind, New York, N.Y., 1969.

Woodward, James A., Jr. *Interactive Computing for Blind Children*. Unpublished M.S. Thesis, University of Arizona, 1972.

Argonne System for Braille Publication

A. Grunwald
Argonne National Laboratory, 9700 South Cass Avenue,
Argonne, Illinois 60439, U.S.A.

In 1966 this author published a paper* in which he suggested that it may be advisable to base dissemination of braille reading material on a new technology; namely, storing braille information on magnetic tape and to present the corresponding text to the user in a continuous stream of braille characters (in non-permanent form) whenever the user wishes to read it. A specification was proposed in this paper in the hope of stimulating experimentation, and as a basis for our own efforts at realising the idea. This specification reads as follows:

1. The machine should be conveniently portable. This implies at least an optional battery operation, and a weight of approximately 4.54 kg.

2. The machine should be inexpensive. An estimated production cost of less than £500 should put it within the financial means of professionals. There are approximately 380,000 blind or severely visually handicapped people in the United States. Let us assume that one out of eight in this population reads braille intensively when braille reading material is more widely available. Free distribution of reading machines to those who need them would then entail expenditure of approximately $25 million - not an excessive amount by government or foundation standards.

3. The machine should be durable, with simple and convenient controls, and should require

* Science, Oct. 7, 1966 (Vol. 154, No. 3745)

standard supplies such as batteries.

4. Presentation of material should be made in the B.1 mode, and the characters should be erased after they have been read.

5. The machine should allow the magnetic tape to move quickly forward and backward, permitting the reader to locate any desired page or passage of text easily.

6. The code used on the magnetic tape should be producible as direct computer output. It should include pagination, indexing, and cueing features for the reader.

7. The tape (including box and reel) should contain at least 1000 words per cubic centimeter of space it occupies to make the system competitive with ink-print volumes.

8. The maximum rate at which the machine presents characters should exceed 22 characters per second. (Three of our subjects routinely achieved this remarkable speed.)

In addition to these requirements, certain accessory features would be highly desirable with regard to the use of the machine for writing and annotating. With the addition of a device incorporating a braille typewriter keyboard, it should be possible to type directly onto magnetic tape. A blind author could then have his text translated into standard print by means of a computer. More commonly, it would simplify his letter writing and note taking, and would also be useful for making annotations in space providing on book tapes.

Since then a continuous effort has been undertaken* at Argonne National Laboratory with corresponding equipment; if compliance with the specification is a measure of success, this effort has succeeded; several more or less systematic tests have been performed with more than 50 subjects,** which seem to confirm that the original criteria in the specification for a useful device were intelligently chosen; most users expressed subjective satisfaction, ranging from qualified or reluctant acceptance to enthusiasm. The U.S. Government, which provided substantive funds for the whole enterprise, obtained a patent on the product in November, 1971 - ancillary devices and methods, especially for the efficient production of tapes, were also developed as part of the whole program and tried out. Extensive market and population studies in this context by a consultant were performed.

Before we felt ready to set specific goals for our work, we felt it necessary to develop a better understanding of the problems than we had. Especially, we wanted to know more about braille reading single word speed potential, and about the most acceptable modes of presentation. The results of a separate study and series of experiments were published in the paper mentioned; they can be summarised as follows:

With dots of normal braille configuration (inter and intra cell spacing of 3.75 and 2.5 mm respectively), the ability to resolve dot patterns by touch is lost at a relative velocity of dots and finger tips of $\geqslant$ 13.75 cm sec^{-1} or 22 char. sec^{-1}. These findings were remarkably consistent for each subject as well as for the group as a whole.*** The reading speed recorded in actual reading coincided with this resolution limit for the most

---

* under this author's direction.

** both sexes, age 6 to 55, pre-existing reading speeds 5 to 218 words per minute.

***this suggests to us a neurological constant.

accomplished readers we have observed* (~ one in ten of the many we did observe over the years). The other finding of the preliminary research was that a continuous stream of characters, passing under fingers which are essentially stationary, is not only an acceptable, but in most cases the preferred mode of presentation.

We then proceeded to design, build and test a prototype, a preproduction model and 30 machines, as well as supporting equipment, etc. The basic components of all our models are the tape deck module with provisions for readout, the fast forward and rewind operations; the braille readout module with an endless plastic belt, on which bi-stable "bubbles" are molded in braille cell configuration, solenoid-driven styli and erase means, which set appropriate dots and depress them after they have been read, provided with a variable speed drive; the data processing and electronic module, which controls the deck and output operations, stylus synchronisation and position sensing, and allows the user to advance the tape to preselected (index) positions, tape writing functions and mode selection**; the 8 watt, 12 V power supply (on or off net, with ~2.5 hr. battery operation capacity).

The machine weights presently ~4 kg and measures 23 x 33 x 7 cm; when tooling for use of stampings, castings, etc., are provided for serial production, the weight would be reduced by at least one-third, and other economies are predictable.

---

* the reading speed reported (up to 320 wpm, the equivalent of 22 char. per second in Grade II English Braille) have been questioned by some professionals, but to my knowledge, neither our method nor these results have ever been invalidated by analyses or experiment.

** The machine reads tapes and writes on tape; if blank spaces are provided on a "book tape" one may make annotations on this tape without deleting the text, and the machine can be directed to read either "book" or "notes" (and to ignore the other); it will move forward, and if an index is selected by the operator, stop automatically at the position indicated. With a writer/editor attachment, a paper copy is produced, and if checked and found satisfactory, the text is automatically transferred from memory to tape.

The controls for the operator's directions are:

On/Off switch
Tape channel selector switch
Index position selector
Speed control
Be't start control, operated by touching the belt or by means of a foot switch
Push buttons for:
- Read book
- Read notes
- Write
- Fast forward
- Rewind

Reading speeds are currently:

Speed Equivalents

Speed	Characters Per Second	Approximate Words Per Minute*
1	5.3	71
2	6.9	92
3	8.5	113
4	10.6	141
5	13.3	177
6	16.4	219

* Computed with 4.5 characters per word, including spaces and punctuation. Character counts, on several samples we have used, ranged from ~ 4.2 - 5.0 and may easily exceed this range.

Other speeds can be implemented easily.

Few people encountered any difficulties with operating the controls. Loading tapes, and to a lesser degree, removing them, however, requires some skill and practice. We have designed the tape deck around a cartridge containing ~ 300 feet of ¼" tape. Because the cartridge requires a complex molding for a housing, we have on the

prototypes used plain (open) 3¼" dia. reels;** the loading difficulty will be eliminated by the switch to cartridges. The reason why we have not used the popular Philips cassettes is connected to the small amount of tape they contain in a given package size. This affects the signal to noise ratio, the storage density and tape stability adversely, singly or in combination; furthermore, the cost of high quality cassettes is relatively high. For experimental or proof of principle design, these factors are irrelevant; i.e., they can - at tolerable cost - be circumvented simply by yielding on storage density. But, as soon as one looks at a consumer product with a main market for individual users, libraries, agencies and so on, even moderate savings in initial price, storage space, mailing cost, and wear and tear accumulate to very sizable factors. Furthermore, the frustration associated with even occasional interruption of access when a cassette fouls the tape, and the convenience of maximal compactness in real life situations should be emphasised. All these factors are directly related to track length available and thickness of carrier used, thus to volume of tape contained in a given package size and weight, and the cassette with its large void spaces and components other than tape is heavily compromised in this regard.

The main question is, of course, how well users are doing with the machine in reading. We have striven to make the experience nearly identical to "normal" braille reading and thereby make learning or re-learning unnecessary. Actually, we found a somewhat more complex situation; firstly, the feel of the plastic reading belt is, of course, different from that of paper; it resembles in this respect thermoformed braille on plastic sheets, which most people like somewhat less than paper, but accept because of its availability. Furthermore, the expectation that users would be able to read with the machine spontaneously up to their usual highest speed turned out to be true only with a small percentage of our

** The machine will, however, accept the cartridge without change.

sample; interestingly, the learning time required is apparently inversely correlated to the pre-existing speed maximum and to reading habitually with a very light touch. Initial difficulties are, furthermore, not surprisingly, often due to a lack of self-confidence or exceedingly competitive attitudes. We were impressed by the finding that the people who read braille much slower than the maximum described earlier seem to exceed their pre-existing top speed considerably after practicing with the machine. It is probably significant - perhaps not only for the special experience at issue here - that learning as a function of experience seems to follow a regular way: We defined "experience" as the product of time spent in practice, modified by an empirical constant multiplier, to be assigned to the individual who is learning, based on progress observed over a period of time. The parame are h = (hours) learning time and Cn = efficiency multiplier of subject, E = Cn.h and S = reading speed. We found that with growing experience the speed tends to approach the maximum of 22 char. sec^{-1} as $S \sim E^{\frac{1}{2}}c$. where c is a proportionality constant.

Conclusions

In conclusion, we submit the following observations:

1. Almost ten percent of the sample found the machine immediately acceptable from the start and used it skillfully even at the higher speeds.

2. Another group, four-fifths of the sample, experienced at least some difficulties in reading with the machine but could read more or less well from the start, at the very least some words at the slowest speed. Those people who continued reading for several hours improved considerably; their reading speed increased along what appears to be a regular

curve towards a maximum in the range of speed typical of the group mentioned in 1. It is especially noteworthy that the reading speed of some of the participants surpassed their individual scores measured with regular braille before exposure to the new system.

3. The remainder of the sample (roughly 10 percent) who did not demonstrate a clear ability to read at Speed 1 after a short exposure, were not followed up, because our resources and the pressure to collect necessary data for development of the equipment did not allow us to develop their skills over longer periods. Some of this group would probably have responded to such efforts.

4. The learning curve suggests a causal relationship between reading steadily moving braille characters and resulting reading speed improvements.

5. The learning curve suggests that the new system could be used to develop braille reading skills.

All students ranging in age from six to eighteen could read spaced words metered on the machine,[6] and approximately half could read some continuous text.

Even very young children demonstrated that they can decipher some braille passing under their fingers at a rate of approximately five characters per second.

One student progressed from reading spaced to continuous material, and another student read spaced phrases as well as singly-spaced words after some practice. We believe several more who were improving in their ability to handle spaced material would have made this shift with further practice. Spaced material,

then, seems promising as a training format; it has been with beginners and with others who have difficulty reading on the machine.

6. At least four factors seem to account for ability to read on the machine: prior braille reading speed, finger sensitivity, motivation, and practice.

Notes and References

1. Most reading speed of participants were measured using a selection from The American Adventure, by K. Bailey et al., Field Ed. Publications, Inc., San Francisco, 1970 (7th grade level on Fry Readability Index.) The younger children were tested using an unfamiliar passage in their basic reader.

2. Designs for a self-threading tape mechanism exist but are not yet incorporated into the system.

3. A separate report will cover an investigation of the influential variables leading to acceptance of dots and methods to optimise this acceptance by modification of the dots.

4. Spaced material was not tried with the six early subjects listed in Table 3 as non-readers.

(a) Final Report Summary (A. Grunwald - Internal Report)

(b) How to Use the Braille Machine (P. Biesemeier) A user's guide explains how to read, write, index, and load the Braille Machine; suggestions for care of tapes and machine are made.

(c) Development of the Argonne Braille Machine - Summary Status Report, December 1972 (A. Grunwald et al.)
The development of the Braille Machine is outlined, and work remaining to be done, fabrication of 30 machines, and generation of reading tapes are described.

(d) Case History of a Bio-Engineering Project, The Argonne Braille Machine (A. Grunwald, RESA Lecture, March 9, 1972)
The braille reading process is examined and maximum reading speeds are determined, as preliminaries to designing a braille machine with moving braille characters.

(e) A Magnetic Tape Braille Machine (J. Haasl and W. Lidinsky, ANL T.M. 176, April 1969)
The system approach, electronic memory and control package, and read-write electronics for the new Braille System are described.

(f) On Reading and Reading Braille (A. Grunwald, Proceedings Braille Research and Development Conference, sponsored by Sensory Aids Evaluation and Development Centre, M.I.T., 1966)
Results of braille reading tests, with and without vocalisation and with continuous as well as random patterns, indicate that pattern recognition in reading is not correlated to comprehension and is a dynamic rather than a static process.

(g) A Braille Reading Machine (A. Grunwald, SCIENCE 154 (1966) 144-146)
The Braille Machine concept is presented, together with experiments to determine specifications for the device, and reader preference with regard to different modes of braille presentation.

(h) The Reading Belt of the Braille Machine (A. Grunwald - Internal Report)
Belt performance is analysed both objectively and subjectively. Remaining problems include dot height, belt deterioration and weld distortion.

(i) The Beltmaker (A. Grunwald and T. Pienias - Internal Report)
The Beltmaker is described and directions for its proper use and maintenance are given.

(j) Argonne Tape Production Facility Systems Description (R. Foster and W. Lidinsky - ANL T.M. 308, June 1977)
The operation of the Tape Production facility is described, including both the system hardware and the system software.

(k) Argonne Braille Machine Tape Production Facility User Guide (R. Foster ANL T.M. 307, June 1977)

(l) Argonne Portable Braille Input Editor (B. Kroupa, W. Lidinsky, and A. Grunwald - ANL T.M. 309, June 1977)
A device, based on the Perkins Brailler, is described which (in conjunction with the Braille Machine) allows an operator (who may be blind) to write on magnetic tape; the tape may be read back on the Braille Machine. For editing and correcting the input before recording, a paper braille copy is presented to the operator.

(m) An On-Line System for Immediate Braille Presentation of Computer-Stored Information to the Blind (A. Grunwald and R. Vonderohe, 1972 Carnahan Conference on Electronic Prosthetics, Lexington, Kentucky, Sept. 1972)
Procedures are described which permit using the braille display mechanism of the Argonne Braille

Machine in a computer terminal for blind clerical workers in lieu of the C.R.T. devices commonly used in such applications.

(n) The Development of a Computerised Grade II Braille Translation Algorithm (L. Leffler, A. Grunwald and W. Lidinsky, 1971 Wescon Conference, San Francisco)
The development of a computerised modular translation system is described. Acceptable Grade II Braille tapes can be produced for use on the Argonne Braille Machine.

(o) The Argonne Braille Translator (L. Leffler and S.M. Prastein - Internal Report)
The Argonne Braille Translator transforms type-setter oriented input (such as monotype paper tape) into a master magnetic tape suitable for replication of tape for the Argonne Braille Machine.

(p) Prospects for Utilisation of Compositor's Tape in the Production of Braille (G. Grunwald, Study for ANL)
Information obtained from a literature search, a questionnaire, and interviews with publishing houses suggests that compositor's tape will have little effect on Braille production: very few titles get on tape completely; tapes are kept only briefly after printing; and different formats are used.

The BRS 76 Braillocord System

Main Features of the Braillocord BRS 76

This braille reading and writing system receives and sends out information in a format of 32 lines of 32 characters each. This is approximately the information content of a typical page of braille. The information is stored in an ordinary C-60 or C-90 magnetic tape cassette, the same as used in audio applications in the common cassette recorder. Using one C-90 compact cassette, up to 400 pages of text can be stored and retrieved. Playback of braille text occurs without unwanted pauses on an electromechanical braille line, a line at a time, from the electronic buffer store, with the operation of a single key. Reading can be done at a rate selected by the individual user, in the manner he is accustomed to in reading ordinary braille pages. Text can be in contracted or uncontracted braille code.

Reading Functions and Use

As mentioned, the 'large page' format of 32 lines of 32 characters on each line is the format used. Each line is returned for reading on the tactile braille line display. Each line is brought up by pressing a key when one reaches the end of a line of text on the display. A single line can be recalled for re-reading or for text study. There is unrestricted selection for recall of lines in a given page stored in the memory, whether forward of backward from a given point in the text, via a comfortably spring-loaded key.

"Page turning", or in this System the passing from one block of stored text to the next, is accomplished automatically.

One can order a search run for a selected page of text (selected, for example, from a table of contents of a book) through a special entry key. The criteria for search can be selected with considerable freedom.

Writing/Editing Function and Use

The format used for entry of text is the same as for reading, i.e., 32 lines of braille text of 32 characters per line. The keyboard allows the selection of functions: reading, writing, editing. The keyboard contains the usual six keys plus space key for entering braille information. In editing, one has a braille character recall key which searches out the place in the text where a correction is to be made. Editing can also be accomplished in the reading mode if one wishes.

A change line key has multiple functions. It will allow passing over a next line of text of a page just entered, and cancellation of just-entered text under constant control via the braille line. Finally, one can change lines to read-and-correct in one pass.

There is a "record" or "enter" key allowing one to insert a correction at a predetermined location of page and line.

There is also a "start position" key which selects the first character to appear on the first line of a page, that is, a "begin to write" key.

Audible Signals

Several kinds of signals aid the editing of text. There is a signal for the end of a line, for example, which becomes an intermittent tone at the point where one enters the 25th character. There is also an end-of-page signal which begins at the beginning of the 32nd line of text and this continues to the end of the line. There is a special signal for the end of the page. Another signal indicates that the device is in record mode, and

also signals when recording is stopped. There is a signal indicating an automatic run-through of the possible remainder of an unfilled written page after one has pushed in the record key.

Corrections in Editing

Line-by-line control of the text material of the last written page is available, with easy correction of mistakes, whether these exist in memory or only on the braille line. Correction is effected with an overwriting of the incorrect character on the line, after which a correction is made automatically in memory. Thus, error-free text can be guaranteed with a quite modest investment of effort. As in the reading mode, one can hold a line of text at the end of the line of text entry. And, as in reading, there is unrestricted selection of lines in a text, whether in forward or backward direction, that is always available.

Additional Data and Features

Connections are available on the basic unit to create a community of users, locally or remotely.

Cassette duplication is possible from the mother-cassette.

The entire system has been developed around modular construction so there are several possibilities for further expansion of its capabilities.

Accessory modules are now in preparation. In due course, they will be added on to the keyboard for entering text.

Finally, there is a connection which allows the easy transfer of text to or from larger open reel tape recorders.

Specification

Storage capacity:	400 pages of 32 lines of braille on each C-90 cassette
Dimensions of basic unit:	35 cm wide x 14 cm high x 33 cm deep (14 x 5.5 x 13 inches)
Weight:	About 7 kg (15.4 pounds)

Developers

Laboratory prototype development was done by Heinrich Hertz Institute for Information Processing Technology Berlin, Inc. This work was supported by the Senator for Commerce, Berlin (as ERP special project).

Production prototype engineering, and serial production was done by:

AID Electronic GmbH Berlin
Wilhelm von Siemens Strasse 16-18
D 1000 Berlin 48

The AID Electronic GmbH/Berlin telephone number is: 030 741 7083.

This work was supported by the German Ministry for Research and Technology (BMFT).

The currect price of the basic unit is DM 8,450 (approximately US $3521, or Sterling £2071). The price will decline as serial production increases.

(Translated from German by L.L. Clark).

TSPS Braille Display

G.F. Dalrymple
Massachusetts Institute of Technology
Cambridge, Massachusetts 02139, USA

The MIT Sensory Aids Evaluation and Development Center, in conjunction with the Arkansas division of Southwestern Bell Telephone and the Arkansas Enterprises for the Blind, Inc., have equipped a modern central office operator's console for use by a blind operator. A single braille line, electronically controlled, has been connected to a Traffic Service Position System (TSPS) console. Most of the interaction between telephone users and telephone operators - except directory assistance - occurs through these consoles. With this braille display, a blind operator can be competitive with sighted operators.

The TSPS braille display consists of 12 cells and is controlled by a Motorola MC 6800 microprocessor. Each cell is connected to a separate 1/0 port (1/2 of a PIA, Peripheral Interface Adapter). The braille display is hardwired to the TSPS console.

The TSPS console has a 12-digit numeric display and approximately 80 lamps. The microprocessor scans the lamps in an appropriate sequence to determine the status of the TSPS console. Any change in the TSPS numeric display causes an interrupt-controlled transfer of data to the microprocessor.

The blind operator uses all the console controls that are used by the sighted operator, except all information from the console is read from the 12-cell braille display. When a new call is received, the initial braille message provides sufficient information for the operator to make the correct response to the customer. Actions by the operator in servicing the call changes the status of the various lamps of the console. The braille message changes with each change of console status, permitting verification of the action taken.

Six control push buttons on the braille display enable the operator to select different braille messages as required. For example, the operator knows when numbers are displayed on the TSPS console. Pressing one of the push buttons causes this data to become the braille message; e.g., time and charges for a pay telephone. Depressing another push button returns the braille display to the previous message.

Another push button causes the messages to be sequenced through in the reverse of the order in which they were initially presented, while yet another cycles them through in the original order. With the provision of these six extra push buttons, essentially all the information presented by the lights or numeric display on the TSPS console is rapidly and concisely available to the operator.

The single-line braille display was assembled from modules containing two cells. All dimensions of the individual cells and of the braille line are essentially the same as a braille line produced by a Perkins braille writer. A two-cell module was dictated by the smallest reliable commercial solenoid available at the time the braille display was initially designed. These solenoids are 7/16 inch in diameter, permitting stacking on 1/2 inch centres, twice the pitch of the braille cell. Each module consists of two identical cells nested together. The completed module extends 4 1/2 inches below the reading surface and about 8 1/2 inches perpendicular to the braille line.

The solenoids are stacked vertically, pointing toward the centre, with plungers moving horizontally. Cams or levers are used to transfer the horizontal plunger motion to the required vertical motion of the pins. Two types of cams are needed, one type for the inside pins and another for the outside pins. The cams are made of brass, while the braille pins are made of steel. Delrin is used for

both the top and lower guides. Snap rings are used to limit the travel of the solenoid plungers and to provide surfaces on the braille pins which the return spring can act against. The module body is made of aluminium.

The cells do not have latching capability; hence power must be expended to hold a pin in the Up position. A latch similar to that developed by Sutherland (ref. 1) could be incorporated at the expense of making the cells 1/2 to 3/4 inch deeper. While latching capability would slightly complicate the control of the cell, it would significantly reduce power consumption.

Initial results have been very encouraging. The present operator can handle essentially all calls without assistance, with the exception of those which require manual timing. The manual timing information is placed on special computer cards and read by an Optical Character Reader (OCR). A template has been made to assist in marking the cards, the rubber stamps have been provided to mark them. Some changes in the microprocessor program are required to make the braille display reflect immediately the change in the supervisory lamps when a customer hangs up. With these changes, the blind operator should be able to handle essentially all calls.

1. Sutherland, N.B. *Development of a Braille Display* The MITRE Corporation, Report MTR-1951.

The Sensory Aids Evaluation and Development Center is a component of the Joint Harvard-MIT Rehabilitation Engineering Center, and is supported, in part, by the Rehabilitation Services Administration. The braille cells were developed under a grant from the E. Matilda Ziegler Foundation.

Editorial Note: The excellent description Mr. Dalrymple has given of an application of advanced technology in the service of blind telephone operators assumes particular importance in view of a recent meeting on this topic: a special session of "Blind Switchboard Operators" at the April 1977 conference of the Technical Aids Committee of the European Regional Committee of the World Council for the Welfare of the Blind. The report from that meeting said, in part "...technical development within telecommunication gives rise to grave concern owing to the fact that the development may cause the employment in this very important occupation...(may be) no longer open to the blind;...a preliminary survey shows that the occupation is one of the most important ones as far as the number of operators employed in Europe is concerned;...low-energy boards...may make it impossible to connect...necessary special aids." Mr. Dalrymple and his colleagues at MIT have shown one viable and working solution to the dilemma. The temptation may be very strong for readers to take pen in hand and enquire of Mr. Dalrymple when they might order a TSPS for installation. It is important to keep in mind, however, that MIT's Sensory Aids Center is a research and development centre not a production facility; and the ability to satisfy a demand which may develop as a result of this work proves problematic for the Institute. There is one possible remedy, however: MIT is, like other research and development centres, amenable to persuasion by those on the outside and there is demand to be met for a development they have encouraged. I express but a personal opinion in saying this, but experience would indicate that it is nearly right: if readers will write to Mr. Dalrymple and tell him of their interest in this development, there is the possibility that pressure from persons outside MIT along with financial support will encourage consideration of serial production of all or part of the braille TSPS system. Again, speaking from a personal perspective, I have heard directors of organisations say that were demand to come from outside any service organisation, then that consumer demand cannot be ignored. There is a moral in all this, but I leave it to the discretion of the reader to infer it.

L.L. Clark

Electronic Aids for the Blind at The Polytechnical University of Madrid

E. Muñoz, A. García, C. López and R. Martínez
Laboratorio de Electrónica II-III, E.T.S.Ingenieros
de Telecomunicación, Ciudad Universitaria,
Madrid -3, Spain

The direct experience with a physics blind student of one of the members of this laboratory motivated the development of some electronic aids for the blind, back in 1972. Tuning and zero adjustment circuits for laboratory measurements, made through auditive outputs, were the first projects carried out by some enthusiastic students. Later, a digital calculator with eight braille digits output was built.

Little effort has been devoted to the development of electronic technology for the blind in Spain. The Spanish Organisation for the Blind (ONCE) is becoming more concerned with this research activity and, with its partial support a digital calculator with eight bimorph braille characters was developed.

Later microprocessors arrived, and we think they can be successfully applied in electronic aids with new possibilities in price and performances. On the other hand, information displays for the blind are still in an unsatisfactory status. Electromechanical tactile braille outputs are always a limit in maintenance, display size, weight and price. Large area tactile displays are not easily achievable today, and this situation really limits drawing and graph transmission to the blind. Along these ideas, microprocessors and new information outputs for the blind, our present projects have been selected.

A cassette system for digitised braille is in a quite advanced status. Their characteristics are similar to those of some commercial systems already announced. A standard cassette assembly plus an IC RAM buffer memory

offer a convenient way to record/reproduce digitalised braille. An output display line of 32 braille characters has been provided. Although the system could easily accept a teletype keyboard, a data transmission line, or calculator outputs, etc., in this model has been aimed at a low-price cassette book-reader.

Speech output offers new possibilities for the blind. Present IC memories and microprocessors have made feasible synthetic voice generation and acoustic man-machine communication. Our present main project concerns the development of synthetic voice in Spanish. In this line, speech calculators offer, probably, the best solution concerning consumption, maintenance and portability. We have developed a speech calculator in Spanish. Digits and basic functions have been stored in a 4K ROM, and speech compression for storage was obtained by performing cuts in the amplitude-versus-time representation of the acoustic display. Further memory minimisation was achievéd through storing basic morphemes and presenting speech words by composing these morphemes. Reasonable comprehension was obtained at sampling rates as low as 3KHz. Compression and morpheme composition was obtained with the aid of an INTEL MDS-80 microprocessor system. This research is being continued for spelled speech and morpheme determination, being a programmed self-learning machine our next goal.

Finally, in the same line of output display improvements, large area tactile electrophysiological displays are being considered. Through a low cost printed-board technology, electrode arrays can be produced that could allow drawings and special forms to be dynamically reproduced for the blind. A study on the characteristics of the adequate electrical pulses, and their possible medical secondary-effecrs on tactile sensitivity, has been initiated. Display dots are formed by two semi-circular electrodes, as close as several hundred microns, being the finger skin the conducting path when the character is excited.

Economic support is very meager for these activities. We think each society has to develop a minimum of technology for the handicapped, to be able not only to adapt and to maintain systems from outside, but to fulfill specific needs. We hope our democratic institutions will pay more attention to the technology for the blind, and the present modest programs could receive more substantial support.

References

S. González, A. Tena and E. Muñoz, *Conversor de Código Digital a Braille. Aplicación a calculadoras portátiles para uso de personas no videntes.* Mundo Electrónico, no. 36, Dec. 1974.

C. López and A. García, *Diseño de un sistema conversor a código Braille para permitir la comunicación con télex a personas ciegas.* Publication UPM/ETSIT/E II-III/02-75.

D.F. Pellicer and E. Muñoz, *Lector de formas para personas invidentes.* Publication ETSIT/UPM/E II-III/10-76.

C. López, A. García and E. Muñoz, *Equipos electrónicos para invidentes. Manejo de la información escrita.* Mundo Electrónico, no. 59, 1977.

World Council for the Welfare of the Blind
Committee on Computerised Braille Production

D.W. Croisdale
Civil Service College, 11 Belgrave Road
London SW1 V1RB, England

Early in 1977 the Committee on Cultural Affairs of the WCWB decided to form a sub-committee on computerised braille production and I was invited to be chairman. The sub-committee is still being formed and to date Mr. R.A.J. Gildea, U.S.A., is the only other sub-committee member to have been appointed.

The accent of the sub-committee's work is on production systems. With this in mind four objectives have been adopted.

(i) to create and maintain a directory of people involved in computerised braille production systems;

(ii) to create the means for collecting and disseminating information about current production activities and future plans;

(iii) to collect statistical information on a regular annual basis about braille production systems;

(iv) to promote cost-effective computerised braille production systems.

Mr. Gildea is taking care of objectives (i) and (ii). Readers of this notice concerned with computerised braille production systems - as systems or operations managers - and who have had no previous contact with Mr.

Gildea can help the work of WCWB by letting Mr. Gildea have their names, addresses and brief details of their association with computerised braille production. The same applies to those who are planning to implement such systems.

When a directory of computerised braille production systems has been compiled it will be published to all concerned. It will also be used for the purposes of objective (iii), which I am looking after, which aims to establish a bank of up-to-date information about operational systems. Common information collected on a regular annual basis may help to identify the appropriate technology and methodologies for particular environments.

Objective (iv) is a distillation of the other objectives. Under this heading it is hoped to mount a symposium in London in the Spring of 1979. The symposium would cover the state-of-the-art of using computers for everyday braille production, and the state of research projects and their likely impact. I would be very grateful to hear from anyone who would like to make a presentation or to attend such a gathering as a delegate. It is extremely doubtful whether any funds could be provided to cover travel and hotel costs so participants had better budget on their employers meeting the bills.

Improvements to the SAGEM Embosser

B. Rottier
SAGEM, 6 Avenue D'Iena, 75783 Paris Cedex 16, France

Since December 1976 (see Braille Automation Newsletter, Dec. 1976, pp. 26-29) a number of modifications have been made to the SAGEM braille embosser. Firstly there is now available a six-key board (plus the space bar, line feed and carriage return) to permit a skilled braillist to input contracted braille.

This keyboard is very similar to the Perkins braille-writer and has proved to be very comfortable and satisfactory to the operator. The operator can easily switch between this keyboard and the conventional typewriter keyboard.

The SAGEM agent in The Netherlands is now E.S.I. bv, Postbus 69, Nieuwerkerk a/d Ijssel, The Netherlands (Tel. 1803 32 17).

The send-receive double-sided braille embosser is now 25,355 Francs and the receive only version 20,870 Francs.

Braille Burster

B.P.C. Business Forms Ltd. (Whitehall Road, Leeds LS12 1BD, England) sell a burster which will trim and separate continuous form braille stationery into separate sheets, and stack them in sequence on the output tray without damaging the dots. The machine will operate at 150 feet a minute but it is noisy. The approximate price, including side trimmers for removing sprocket holes, is £800.

Braille Microprocessor Translation Program

R. Fox (Tonedale House, Wellington, Somerset, England) has written a microprocessor-based braille translation program. The program takes 2500 bytes, data 2000 bytes and associated lists 500 bytes; translation speed is about 100 characters per second.

It is proposed to use this program as a component of a system for the deaf-blind which will be based at Oxford University.

Correction

The editors apologise for an error in the last issue (July 1977). The following paragraph was accidentally omitted from page 30 (5th paragraph).

> For material required in single, or a small number of, copies a sequential braille printer will be used. This printer will be either a LED-120 or a SAGEM REM-8. At the time of writing no definite decision has been taken on which of these will be used. This printer will also be used for the production of proofreading copy in braille.